ORDER NO. AD9101012C0
A2

Service Manual

Cassette Deck

Stereo Double Cassette Deck

RS-TR212

DOLBY B·C NR

RS-TR165 MECHANISM SERIES (AR300)

SPECIFICATIONS

■ CASSETTE DECK SECTION

Deck system	Stereo cassette deck
Track system	4-track, 2-channel
Heads	
(deck 1) Play	Permalloy head
(deck 2) Rec/play	Permalloy head
Erasing	Double-gap ferrite head
Motors	
(deck 1) Capstan/reel table drive	DC servo motor
(deck 2) Capstan/reel table drive	DC servo motor
Recording system	AC bias
Bias frequency	80 kHz
Erasing system	AC erase
Tape speed	4.8 cm/sec. (1⅞ ips)
Frequency response (w/o Dolby NR)	
NORMAL	40 Hz~15 kHz (±3 dB)
	20 Hz~17 kHz
CrO_2	40 Hz~15 kHz (±3 dB)
	20 Hz~17 kHz
METAL	40 Hz~16 kHz (±3 dB)
	20 Hz~18 kHz
S/N (signal level=max recording level, CrO_2 type tape)	
Dolby C NR on	74 dB (CCIR)
Dolby B NR on	66 dB (CCIR)
Dolby NR off	56 dB (A weighted)
Wow and flutter	0.1% (WRMS)
Fast forward and rewind time	
	Approx. 110 seconds with C-60 cassette tape
Input sensitivity and impedance	
LINE	60 mV/47 kΩ
Output voltage and impedance	
LINE	400 mV/800 Ω
HEADPHONES	30 mV/8Ω
LOAD IMPEDANCE	8Ω~600Ω

■ GENERAL

Power consumption	17 W
Power supply	AC 120 V, 60 Hz
Dimensions (W×H×D)	430×136×290 mm
	(16 15/16"×5 3/8"×11 13/32")
Weight	4.7 kg (10.4 lb.)

Note

1. **Specifications are subject to change without notice.**
2. **Weight and dimensions are approximate.**

***Dolby noise reduction manufactured under license from Dolby Laboratories Licensing Corporation.**
"Dolby" and the double-D symbol are trade marks of Dolby Laboratories Licensing Corporation.

Color

(K)...Black Type

Areas

Country Code	Area	Color
(P)	U.S.A.	(K)
(PC)	Canada.	
(E)	Continental Europe.	
(EB)	Great Britain.	
(EG)	F.R. Germany and Italy	
(GC)	Asia, Latin America, Middle Near East and Africa.	
(GN)	Oceania.	

Technics

www.hifiengine.com

■ CONTENTS

	Page
SAFETY PRECAUTION	2
ACCESSORIES	2
LOCATION OF CONTROLS	3, 4
CONNECTIONS	5
DISASSEMBLY INSTRUCTIONS	6~9
MEASUREMENTS AND ADJUSTMENTS	10~12
BLOCK DIAGRAM	13, 14
SCHEMATIC DIAGRAM	15~18
PRINTED CIRCUIT BOARDS	19~22
WIRING CONNECTION DIAGRAM	23
DESCRIPTION OF FL PANEL	24
FUNCTIONS OF IC TERMINALS	25
REPLACEMENT PARTS LIST	26~30, 35, 36
MECHANISM PARTS LOCATION (DECK 1)	31, 32
(DECK 2)	33, 34
CABINET PARTS LOCATION	37, 38

■ SAFETY PRECAUTION (This "safety precaution" is applied only in U.S.A.)

1. Before servicing, unplug the power cord to prevent an electric shock.
2. When replacing parts, use only manufacturer's recommended components for safety.
3. Check the condition of the power cord. Replace if wear or damage is evident.
4. After servicing, be sure to restore the lead dress, insulation barries, insulation papers, shields, etc.
5. Before returning the serviced equipment to the customer, be sure to make the following insulation resistance test to prevent the customer from being exposed to a shock hazard.

•INSULATION RESISTANCE TEST

1. Unplug the power cord and short the two prongs of the plug with a jumper wire.
2. Turn on the power switch.
3. Measure the resistance value with ohmmeter between the jumpered AC plug and each exposed metal cabinet part, such as screwheads antenna, control shafts, handle brackets, etc. Equipment with antenna terminals should read between 3 MΩ and 5.2 MΩ to all exposed parts. (Fig. A) Equipment without antenna terminals should read approximately infinity to all exposed parts. (Fig. B)

Note: Some exposed parts may be isolated from the chassis by design. These will read infinity.

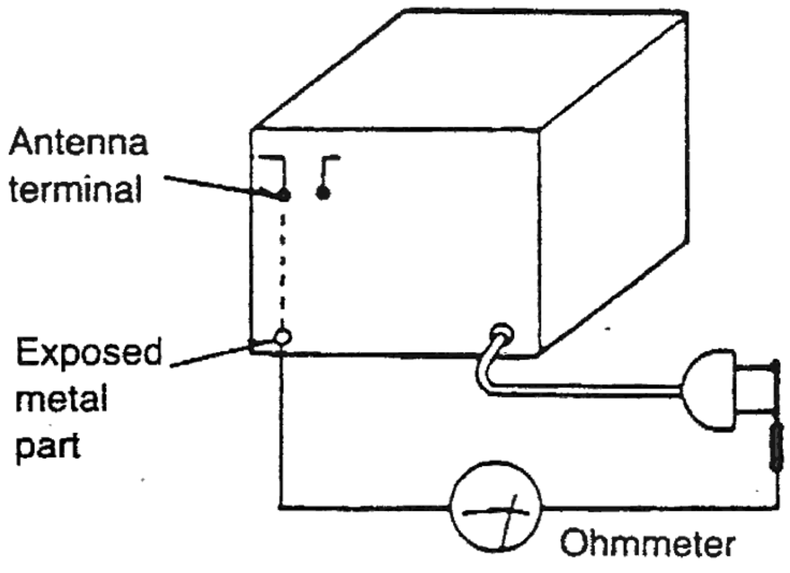

(Fig. A)

Resistance=3 MΩ–5.2 MΩ

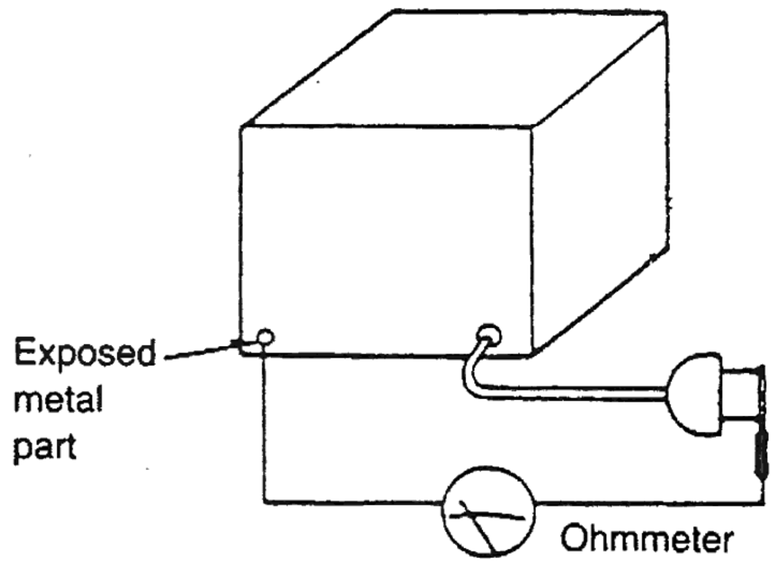

(Fig. B)

Resistance=Approx. ∞

4. If the measurement is outside the specified limits, there is a possibility of a shock hazard. The equipment should be repaired and rechecked before it is returned to the customer.

■ ACCESSORIES

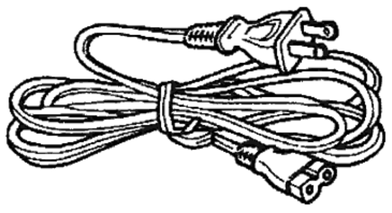

AC power supply cord
(polarized) ..... 1 pc.
(SJA175-1) ..... (P)
(SJA175) ..... (PC)
(SFDAC05E03) ..... (E, EG)
(SJA193-1) ..... (EB)
(SJA173-1) ..... (GN)
(RJA0004) ..... (GC)

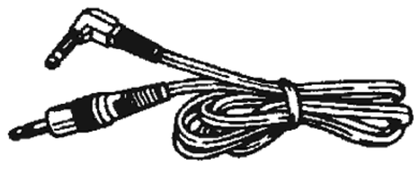

Stereo mini cables
(SJP2257T) ..... 2 pcs.
(For remote control cable 1
For synchro edit cable ..... 1)

AC plug adaptor ..... 1 pc.
(For GC area only)

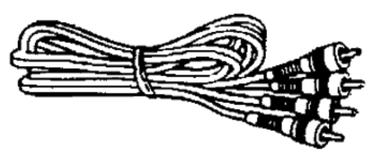

Stereo connection cables
(SJP2249-3) ..... 2 pcs.

www.hifiengine.com

■ LOCATION OF CONTROLS

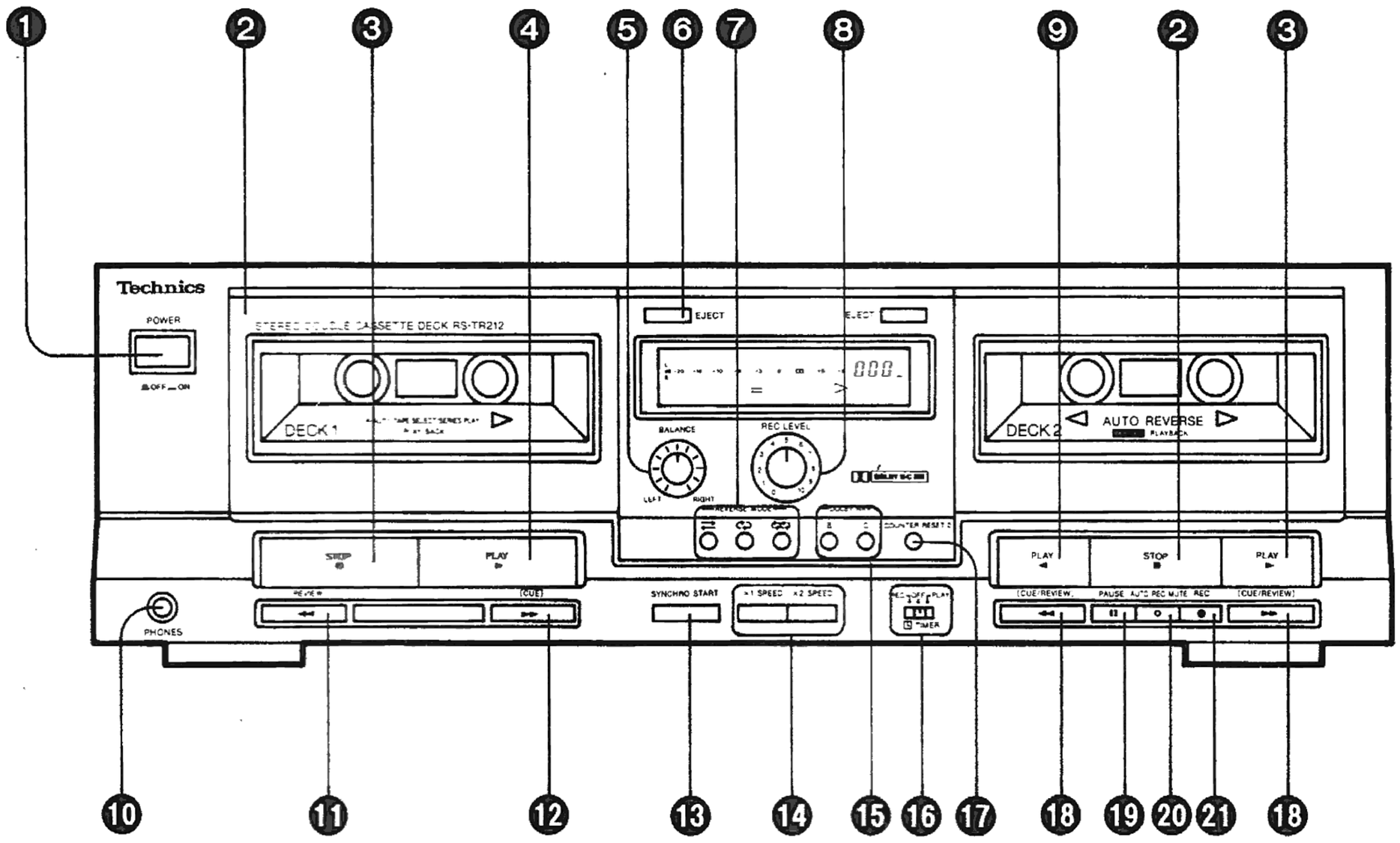

•Controls common to both tape decks/Controls applicable to tape deck 1 and/or 2

❶ Power switch (POWER)
Press (▙_▄) to switch the power on.
Press again (▄_▙) to switch the power off.

❷ Cassette holder

❸ Stop button (■ STOP)
This button is used to stop the tape movement.

❹ Forward-side playback button (► PLAY)
This button is used to start the playback or recording (of deck 2 only) of side "A" of the cassette.
(The tape will move in the left-to-right direction.)

❺ Recording-balance control (BALANCE)
This control is used to balance the left and right sound levels of deck 2 during recording.

❻ Eject button (EJECT)
This button is used to open the cassette holder.

❼ Reverse-mode selectors (REVERSE MODE)
These selectors are used for selection of the reverse mode (for either playback or recording).

❽ Recording-level control (REC LEVEL)
This control is used to regulate the recording level of deck 2

❾ Reverse-side playback button (◄ PLAY)
This button is used to start the playback or recording of side "B" of the cassette in deck 2.
(The tape will move in the right-to-left direction.)

❿ Headphones jack (PHONES)

⓫ Rewind/review button (◄◄ REVIEW)
This button is used to rewind the tape.
During playback this button is used to review the contents at high speed.

⓬ Fast-forward/cue button (►► CUE)
This button is used to advance the tape. During playback this button is used to cue the contents at high speed.

⓭ Synchro-start button (SYNCHRO START)
This button is used to start a tape-to-tape recording, simultaneously starting deck 1 (the playback deck) and deck 2 (the recording deck).

⓮ Edit-recording tape-speed buttons (×1 SPEED, ×2 SPEED)
These buttons are used to select the recording speed during edit-recording.

⓯ Dolby noise-reduction buttons (DOLBY NR)
These buttons are used to reduce the hissing noise heard from the tape. This unit is provided with both the B-type and C-type noise-reduction systems.

⓰ Timer switch (TIMER)
This switch is used to automatically begin a tape recording or tape playback at a certain time, selected by an optional timer. ("off" position.) (rec/off/play)

⓱ Tape counter reset button (COUNTER RESET 2)
This button is used to reset the tape counter indication to "000".

⓲ Fast-forward/cue, rewind/review buttons (►►/◄◄ CUE/REVIEW)
These buttons are used to advance or rewind the tape.
During playback these buttons are used to cue or review while listening to the contents at high speed.

⓳ Pause button (❚❚ PAUSE)
This button is used to temporarily stop the tape playback or recording of deck 2 only.

⓴ Automatic-record-muting button (▢ AUTO REC MUTE)
This button is used to make a silent interval on the tape while recording is in progress on deck 2.

㉑ Record button (● REC)
This button is used to set deck 2 to the recording stand-by mode.

www.hifiengine.com

●Display Section

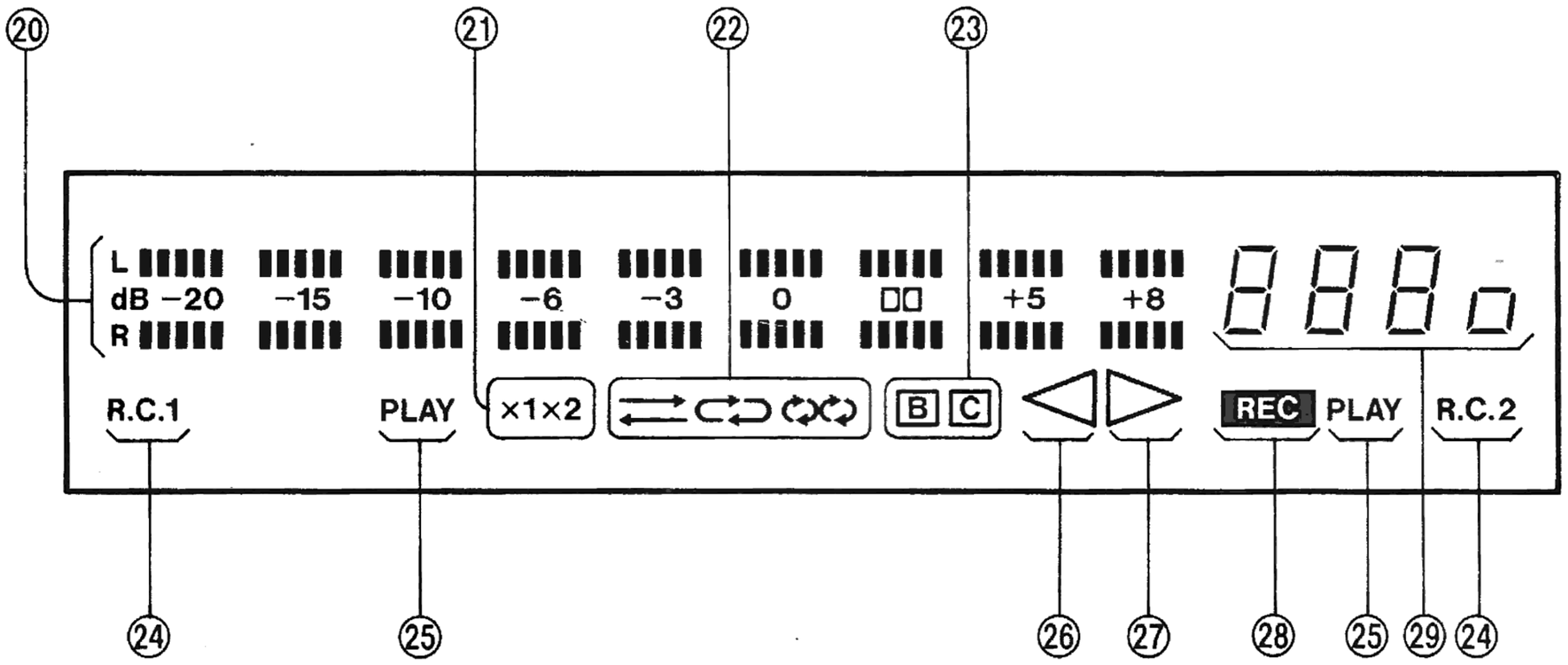

●Indicators common to both tape decks

⑳ Input level meter

During playback, this meter indicates the level of the recorded sound.
During recording, it indicates the level being recorded, adjusted by the recording-level controls.

㉑ Edit-recording tape-speed indicators (×1, ×2)

One of these indicators illuminates to show which of the tape-to-tape recording speeds was selected by pressing one of the edit-recording tape-speed buttons.

㉒ Reverse-mode indicators (⇄ , ⊂⊃ , ⟲⟳)

Each indicator illuminates to show which of the reverse modes was selected by the reverse-mode selectors.

㉓ Dolby noise-reduction indicators (B, C)

Each indicator illuminates to show the tape of Dolby noise-reduction system selected by pressing one of the Dolby noise-reduction buttons.

●Indicators applicable only to tape deck 1 or 2

㉔ Remote-control indicator (R.C.1, R.C.2)

Illuminates to indicate that this unit can now be controlled by the remote-control transmitter of the appropriate receiver connected.

㉕ Playback indicator (PLAY)

When this indicator illuminates steadily, it indicates that this unit is in the playback or recording mode (of deck 2 only).
When flashing continually, indicates that deck 2 is in the pause mode or in the recording stand-by mode.

㉖ Reverse-side indicator (◁)

Illuminates during playback or recording of deck 2, to indicate that side "B" of the tape is being used.

㉗ Forward-side indicator (▷)

Illuminates during playback or recording of deck 2, to indicate that side "A" of the tape is being used.

㉘ Recording indicator (REC)

Illuminates to indicate that deck 2 is in the recording stand-by mode or is recording.

㉙ Tape counter

Indicates the amount of tape movement separately for deck 2.
The least significant digit indicates tape movement.

www.hifiengine.com

■ CONNECTIONS

Before making connections, be sure that the power to this unit and all other system components is first turned off.
See the operating instructions of the amplifier or the compact disc player for details.

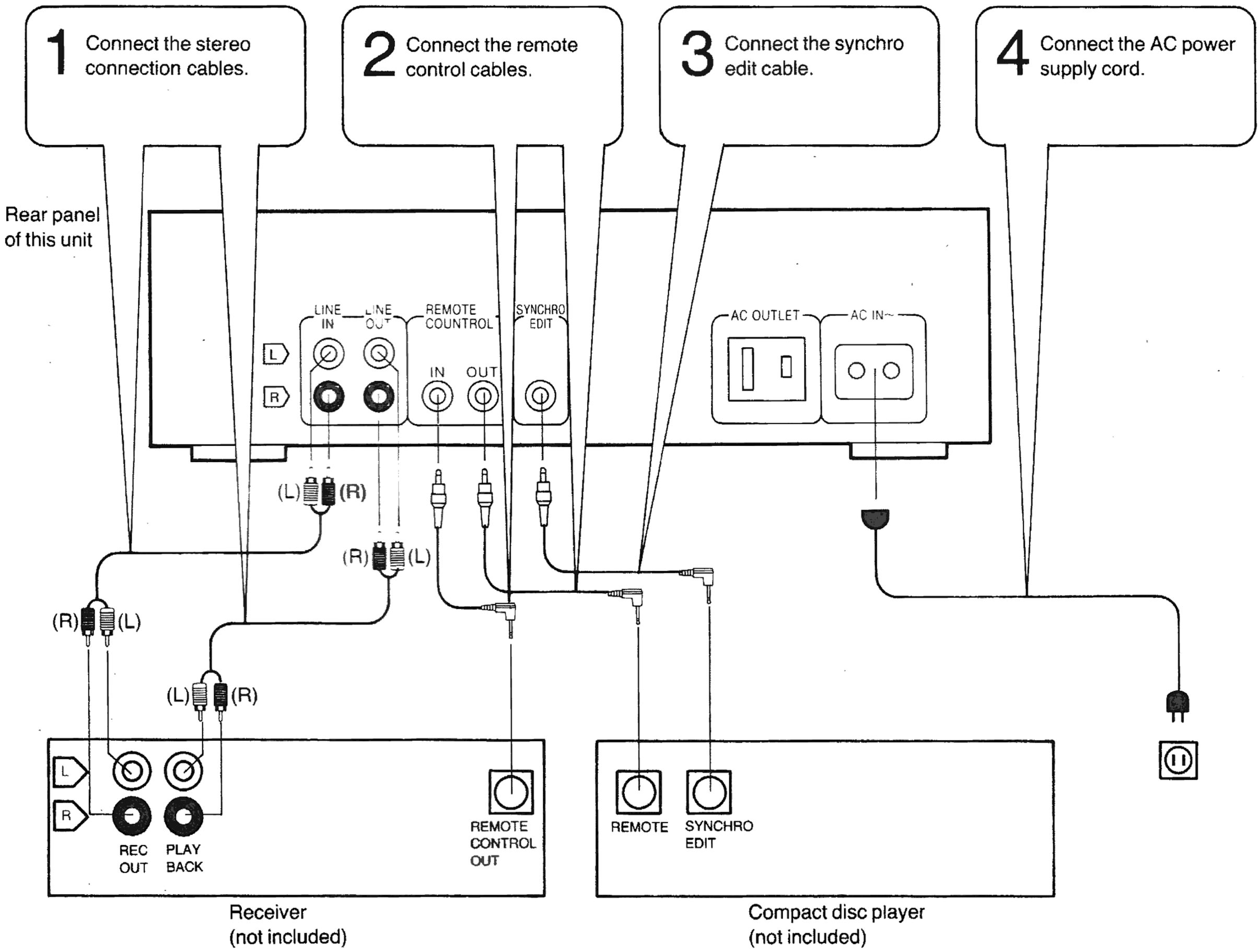

1 Connect the stereo connection cables (included) to the REC OUT and PLAYBACK terminals of the amplifier or receiver.

2 Use the included remote control cable to connect the REMOTE CONTROL INput to the REMOTE CONTROL OUTput on the Receiver.

The following functions can be operated by remote-control (When connected to the appropriate Technics amplifier or receiver): Playback, Stop, Pause, Fast-forward/cue, Rewind/review, Record, Auto record mute, and 1–2 (A-B) deck selection.

The REMOTE CONTROL "OUT" terminal is provided to connect a Technics Compact Disc Player or Graphic Equalizer.

3 Connect the synchro edit cable (included) to the "SYNCHRO EDIT" terminal of selected Technics compact disc player.

4 Connect the power supply cord (included) to the household AC outlet.

The REMOTE CONTROL and SYNCHRO EDIT terminals can only be used with selected Technics Components. Please contact your dealer for details.

"AC OUTLET" (UNSWITCHED)

Power is always available, regardless of the unit's power switch setting.
Audio equipment rated up to 100 W can be connected.

www.hifiengine.com

■ DISASSEMBLY INSTRUCTIONS

"ATTENTION SERVICER"
Some chassis components may have sharp edges. Be careful when disassembling and servicing.

Ref. No. 1	Removal of the Cabinet
Procedure 1	

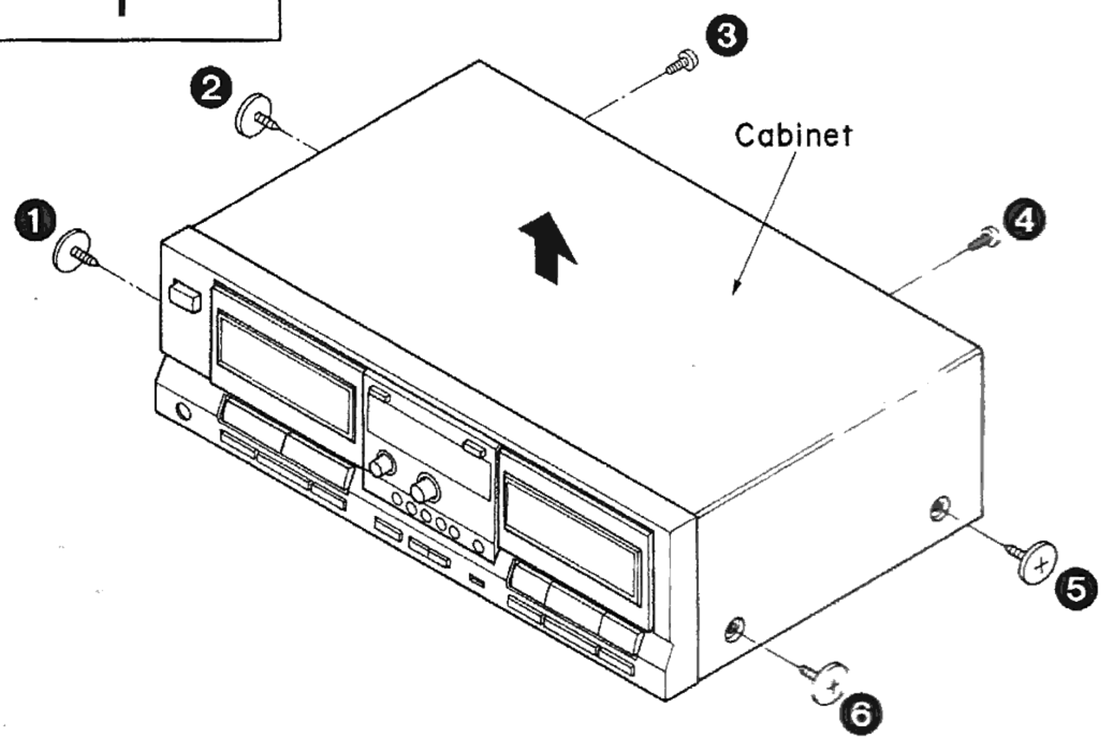

●Remove the 6 screws (❶~❻).

Ref. No. 3	Removal of the Main P.C.B.
Procedure 1→2→3	

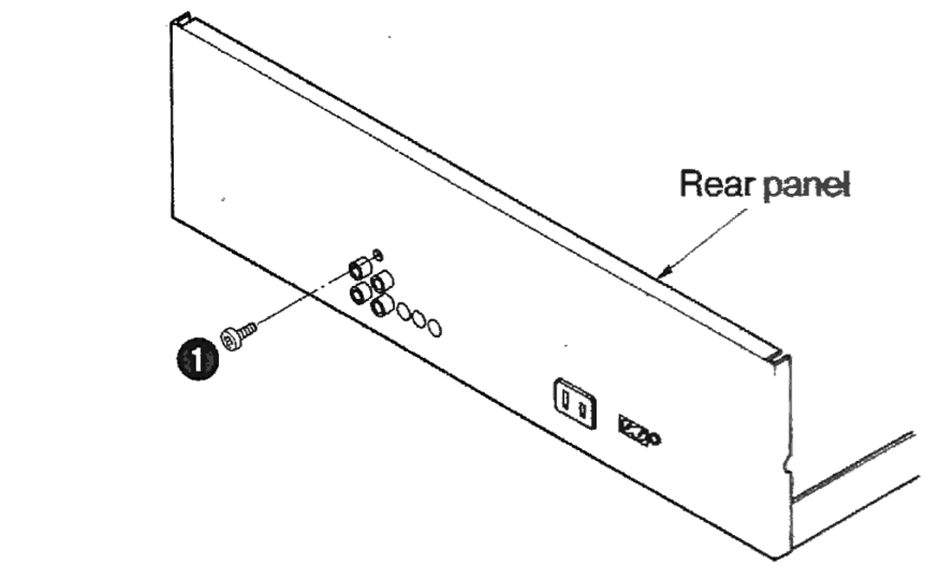

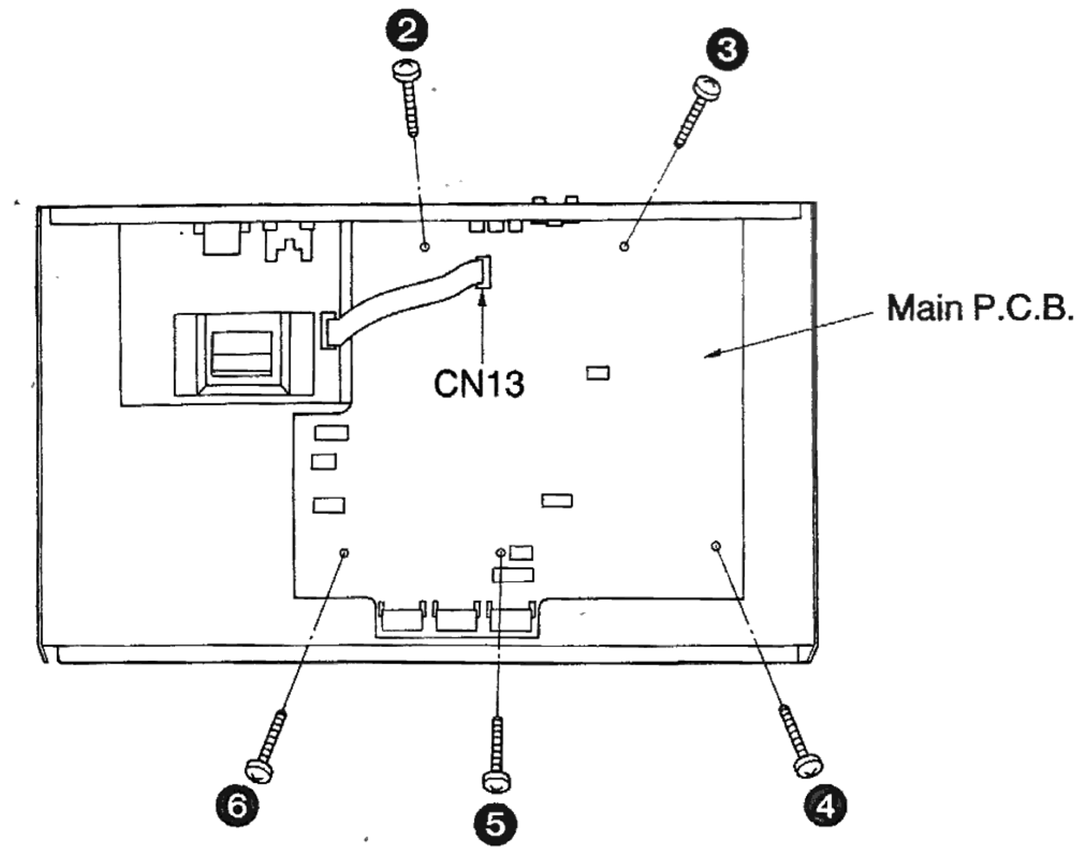

1. Remove the 6 screws (❶~❻).
2. Remove the 1 flat cable (CN13).

Ref. No. 2	Removal of the Front Panel
Procedure 1→2	

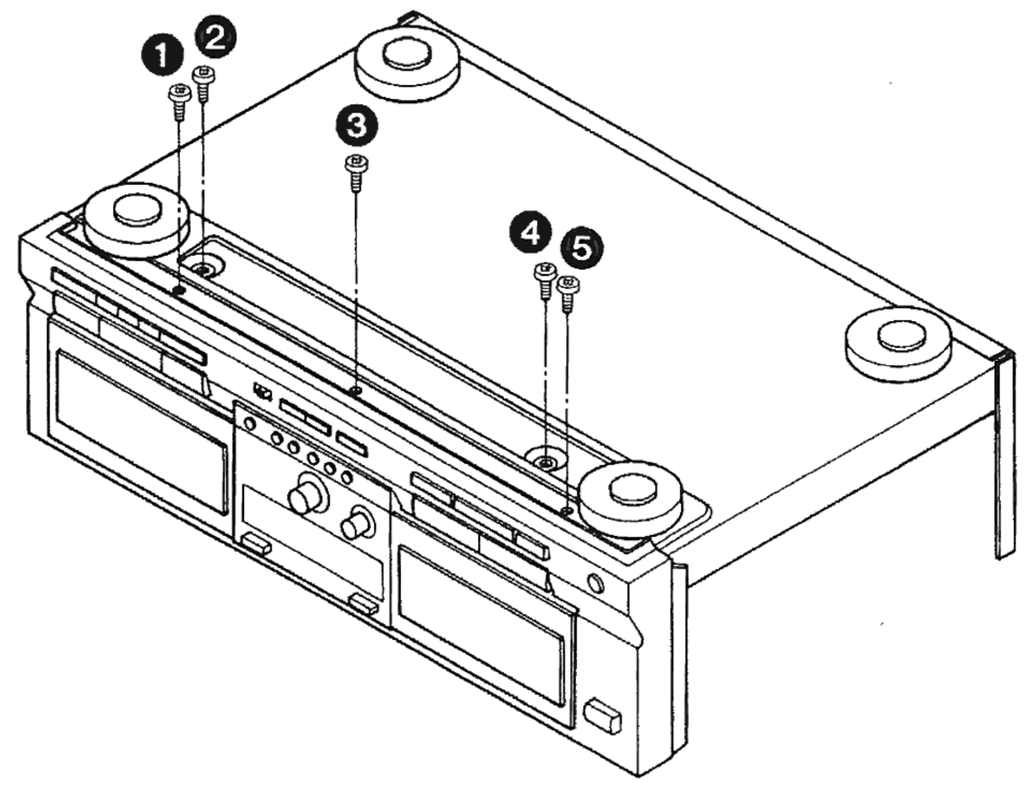

1. Remove the 5 screws (❶~❺).

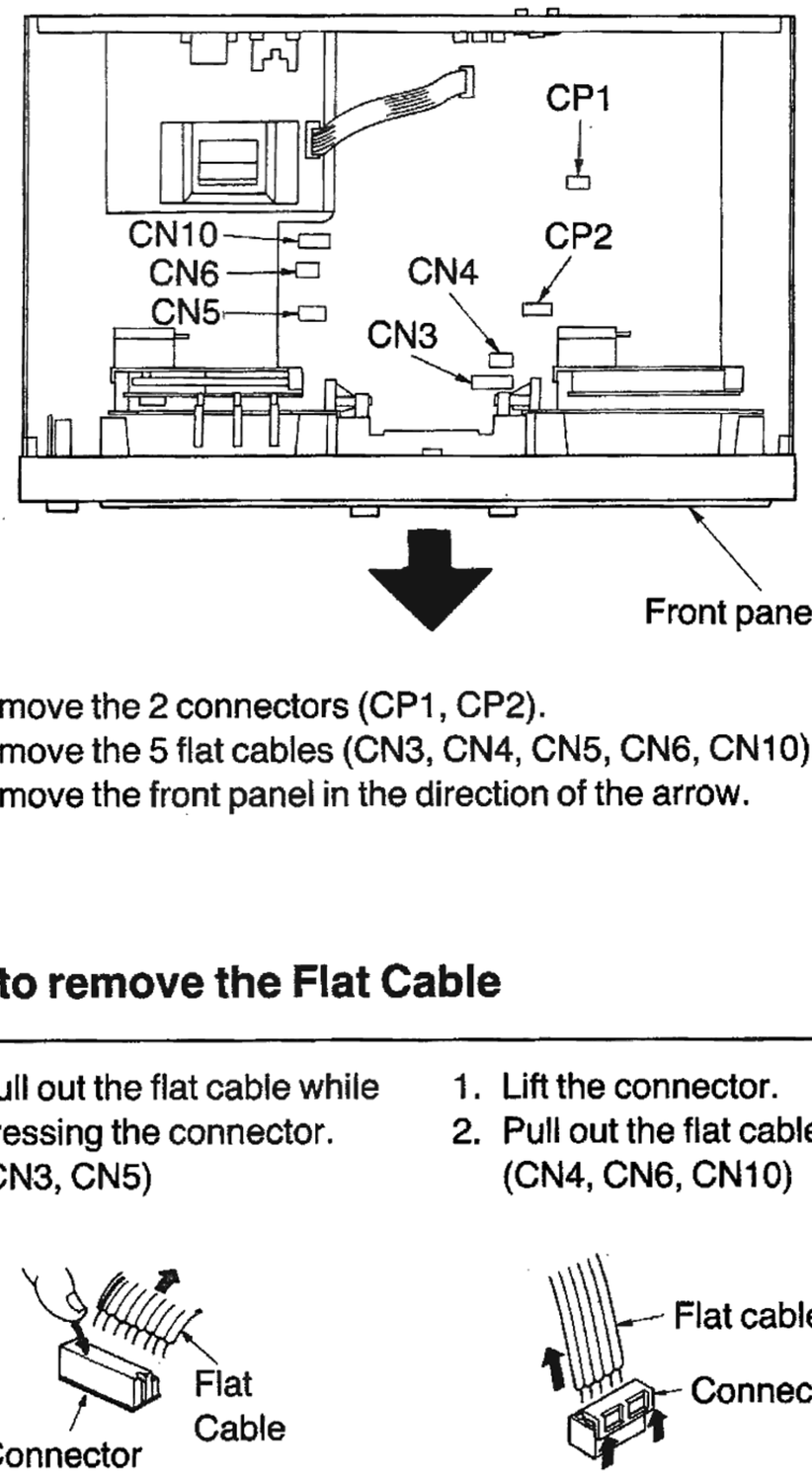

2. Remove the 2 connectors (CP1, CP2).
3. Remove the 5 flat cables (CN3, CN4, CN5, CN6, CN10).
4. Remove the front panel in the direction of the arrow.

How to remove the Flat Cable

●Pull out the flat cable while pressing the connector. (CN3, CN5)

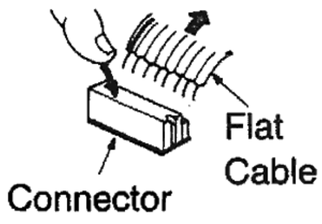

1. Lift the connector.
2. Pull out the flat cable. (CN4, CN6, CN10)

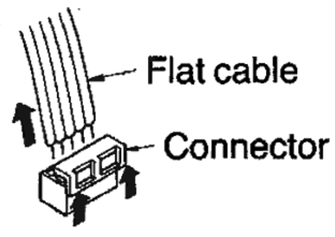

www.hifiengine.com

Ref. No. 4 — Removal of the Power Supply P.C.B.

Procedure
1→4

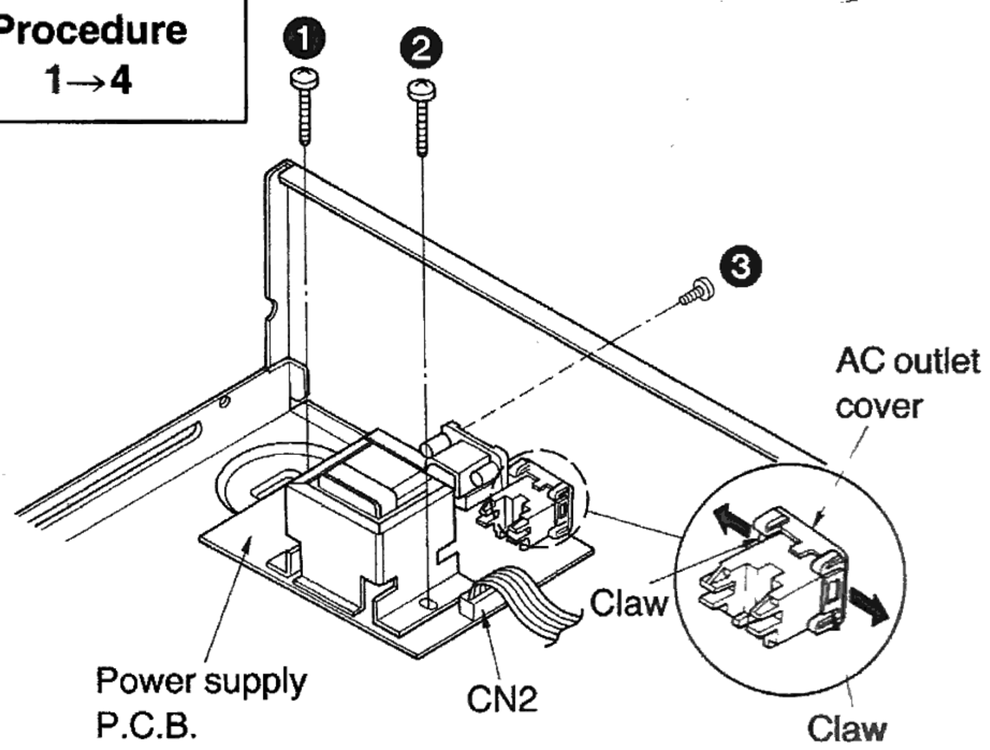

1. Remove the 1 flat cable (CN2).
2. Remove the 3 screws (❶~❸).
3. Release the 2 claws of the AC outlet cover. **(P, PC areas only.)**

Ref. No. 5 — Removal of the Power Switch/ Headphones Jack P.C.B.

Procedure
1→2→5

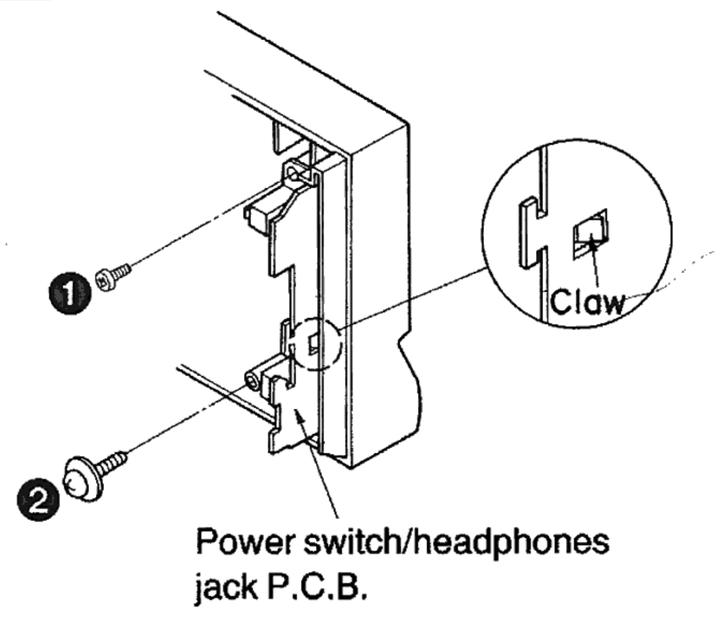

1. Remove the 2 screws (❶, ❷).
2. Release the 1 claw.

Ref. No. 6 — Removal of the FL Meter P.C.B.

Procedure
1→2→6

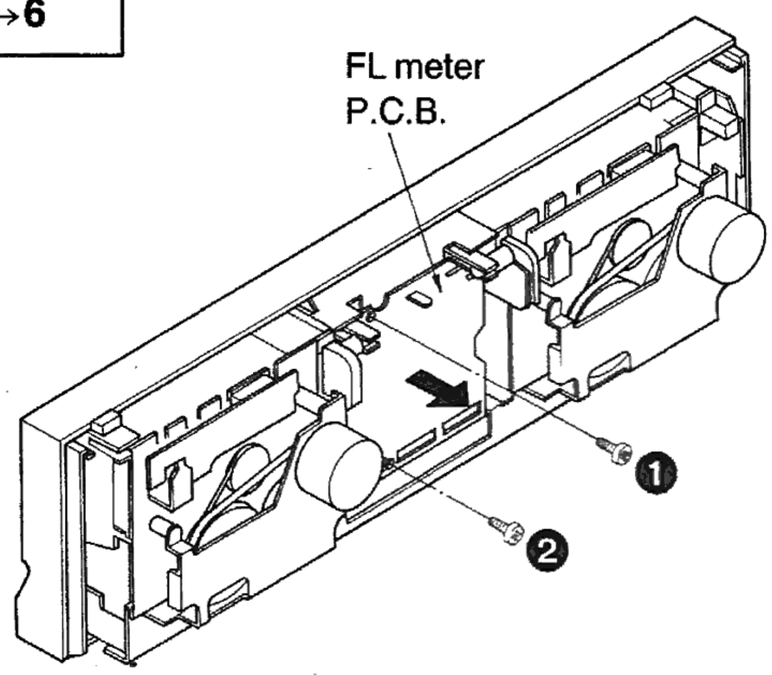

1. Remove the 2 screws (❶, ❷).
2. Remove the FL meter P.C.B. in the direction of the arrow.

Ref. No. 7 — Removal of the Mechanism Units (DECK 1, DECK 2)

Procedure
1→2→7

■ Mechanism Unit (DECK 1)

1. Press the eject button and open the cassette holder.
2. Remove the 4 screws (❶~❹).

■ Mechanism Unit (DECK 2)

1. Press the eject button and open the cassette holder.
2. Remove the 4 screws (❺~❽).

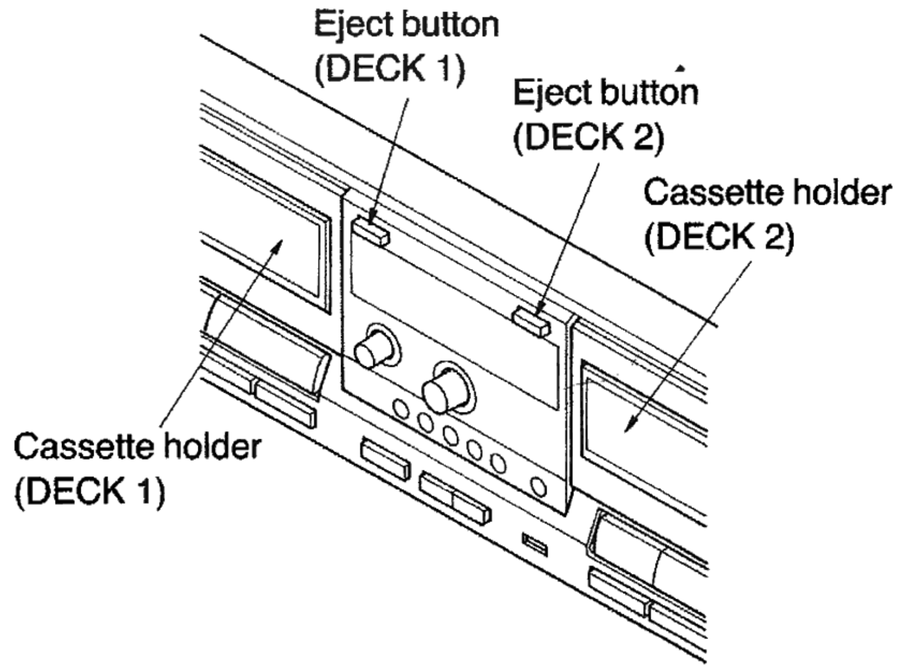

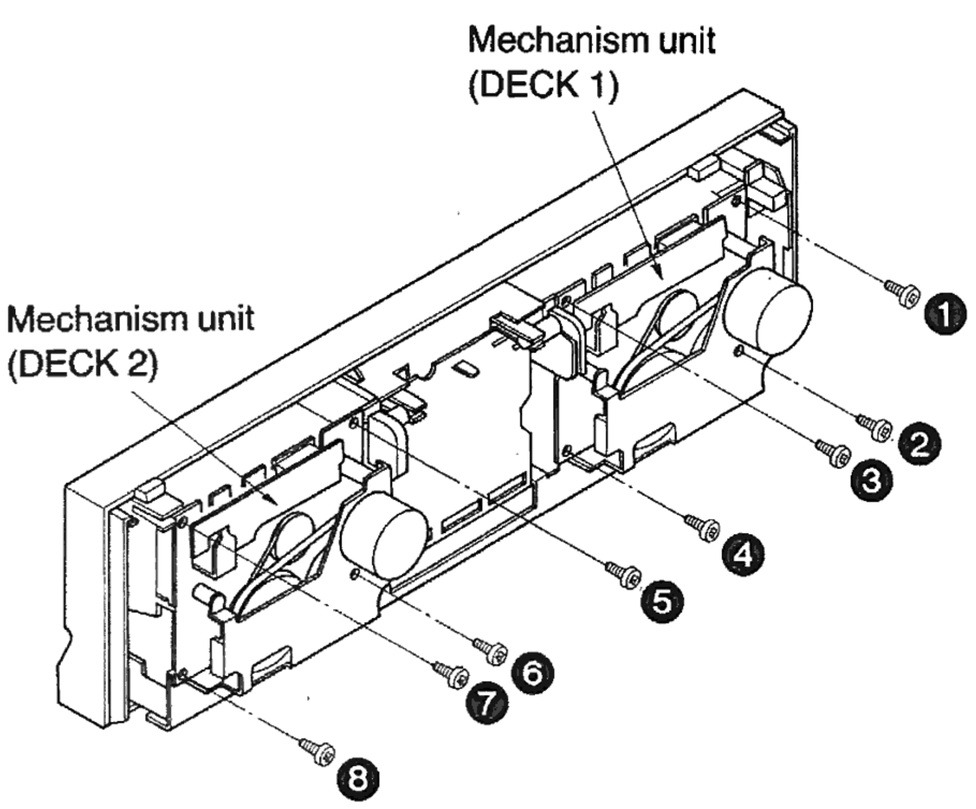

Ref. No. 8 — Removal of the Mechanism Angle

Procedure
1→2→6→7→8

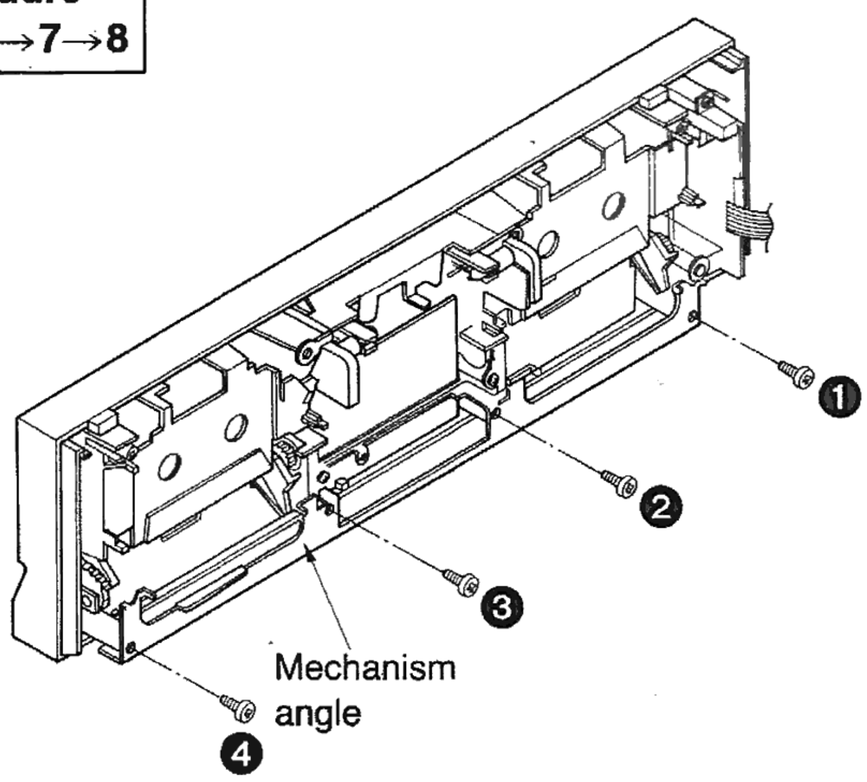

- Remove the 4 screws (❶~❹).

www.hifiengine.com

Ref. No. 9	Removal of the Eject Angle, Eject Buttons, and Eject Lever
Procedure 1→2→6→7→9	

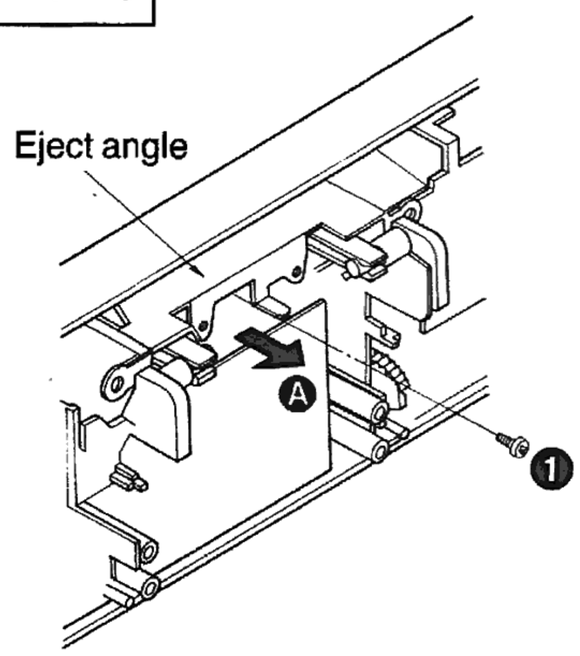

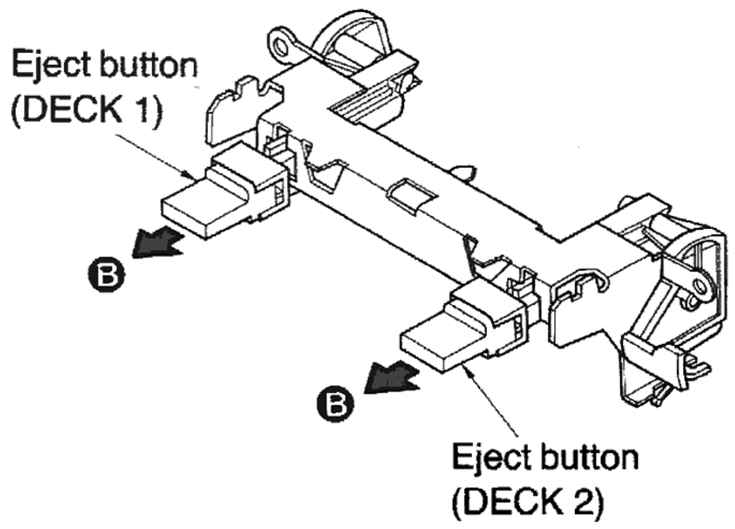

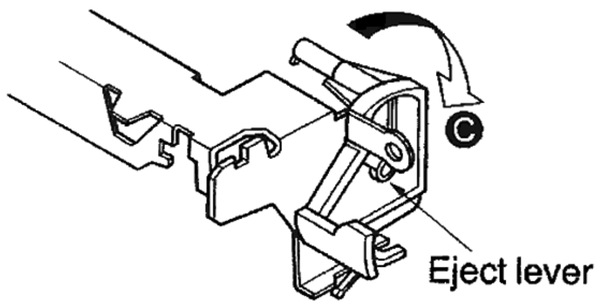

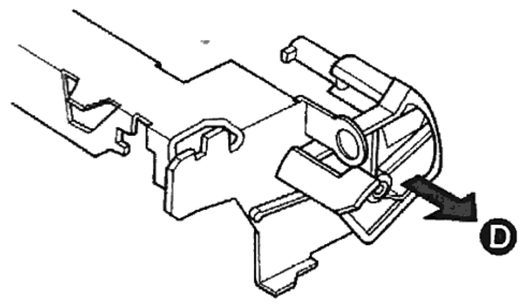

1. Remove the 1 screw (❶).
2. Pull out the eject angle in the direction of the arrow Ⓐ.
3. Pull out the eject buttons in the direction of the arrow Ⓑ.
4. Turn the eject lever in the direction of the arrow Ⓒ, and remove the eject lever in the direction of the arrow Ⓓ.

Ref. No 10	Removal of the Cassette Holder (DEDK 1, DECK 2)
Procedure 1→2→6→7→8→10	

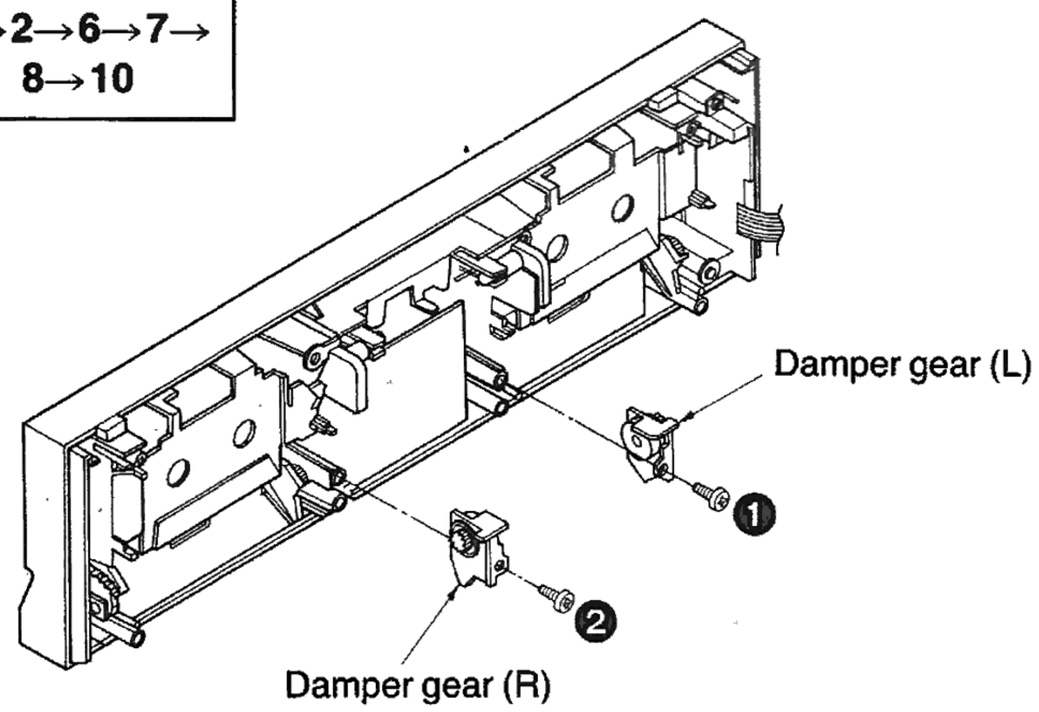

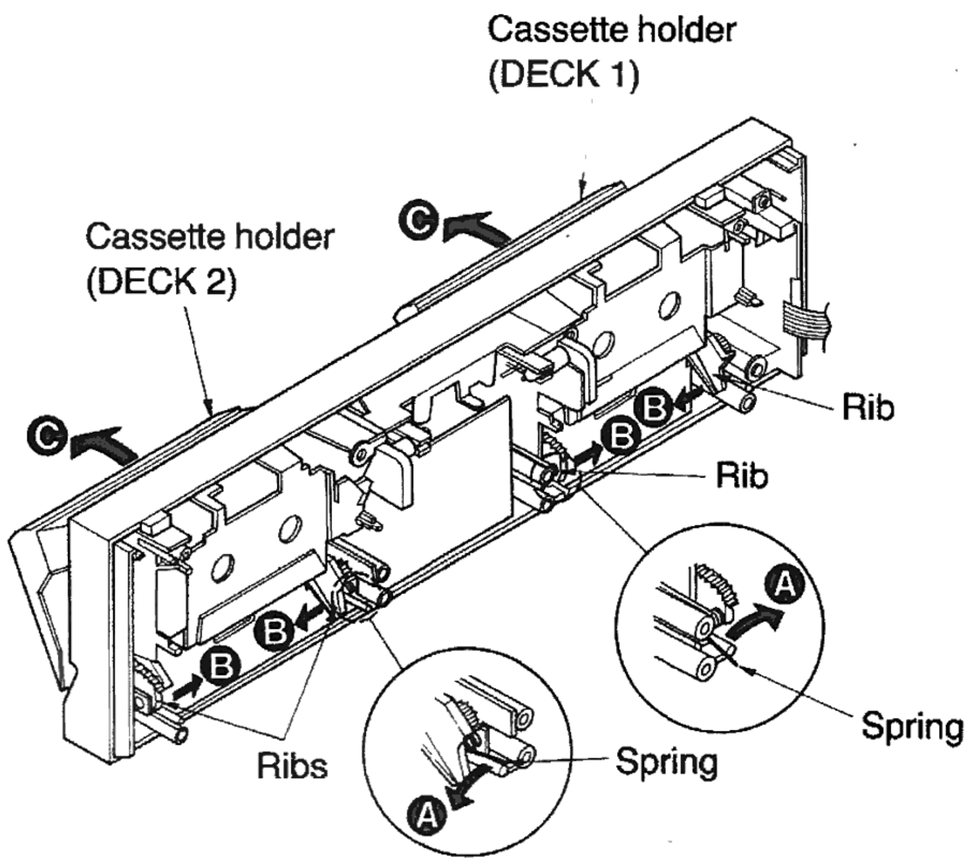

1. Remove the 2 screws (❶, ❷).
2. Remove the damper gear (L) and damper gear (R).
3. Remove the spring in the direction of the arrow Ⓐ.
4. Remove the ribs in the direction of the arrow Ⓑ.
5. Remove the cassette holder in the direction of the arrow Ⓒ.

Ref. No. 11	Removal of the Operation (DECK 1) P.C.B. and Operation (DECK 2) P.C.B.
Procedure 1→2→6→7→8→10→11	

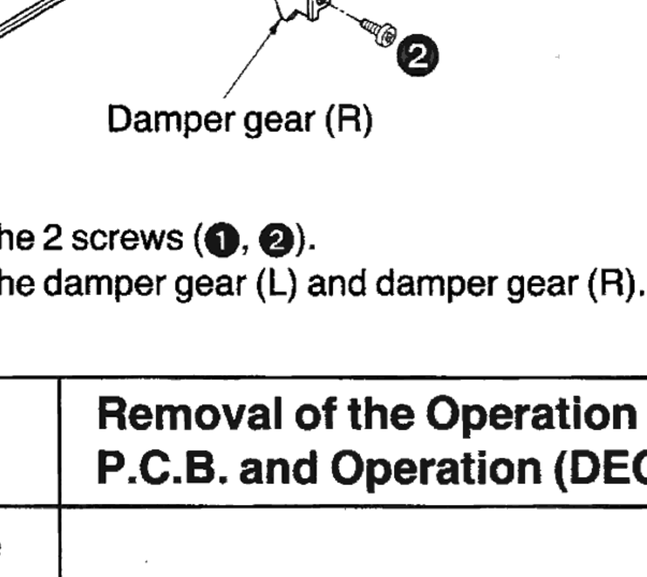

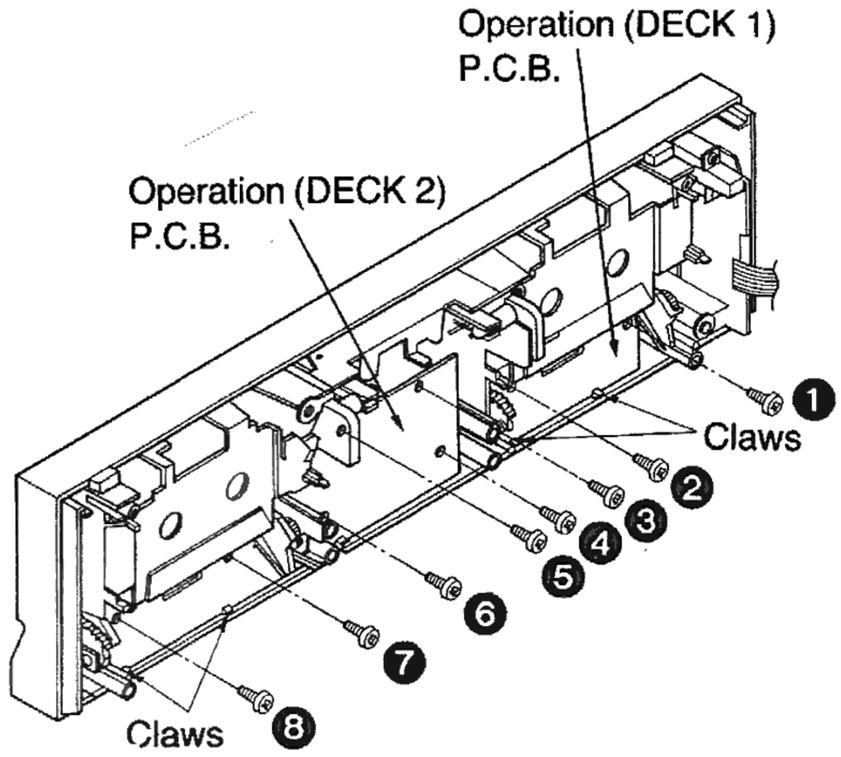

1. Remove the balance knob and rec level knob.
2. Remove the 8 screws (❶~❽).
3. Release the 4 claws.

www.hifiengine.com

Ref. No 12	How to check the Main P.C.B.
Rrocedure 1→12	●When checking the soldered surfaces of main P.C.B. and replacing the parts, do as show.

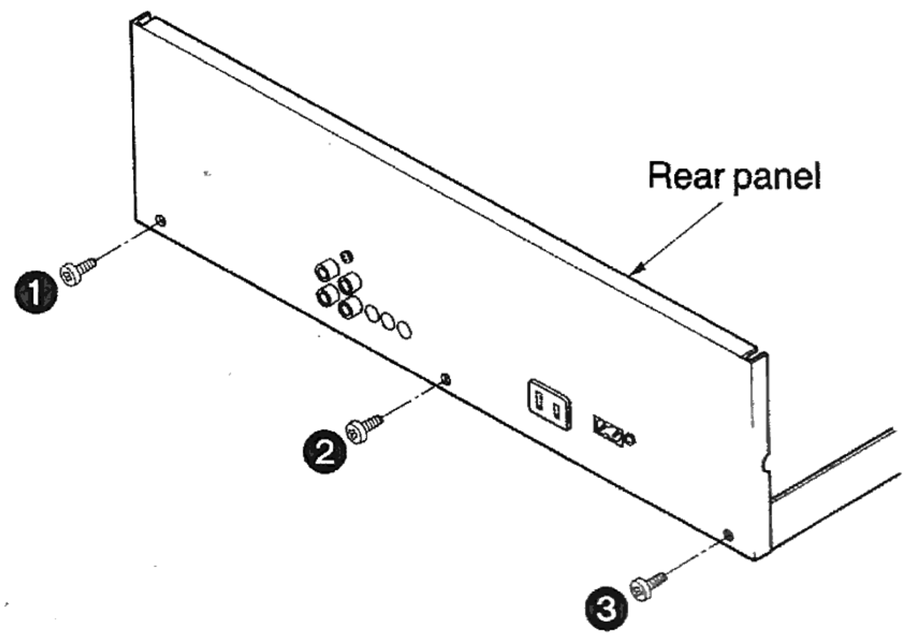

1. Remove the 3 screws (❶~❸).

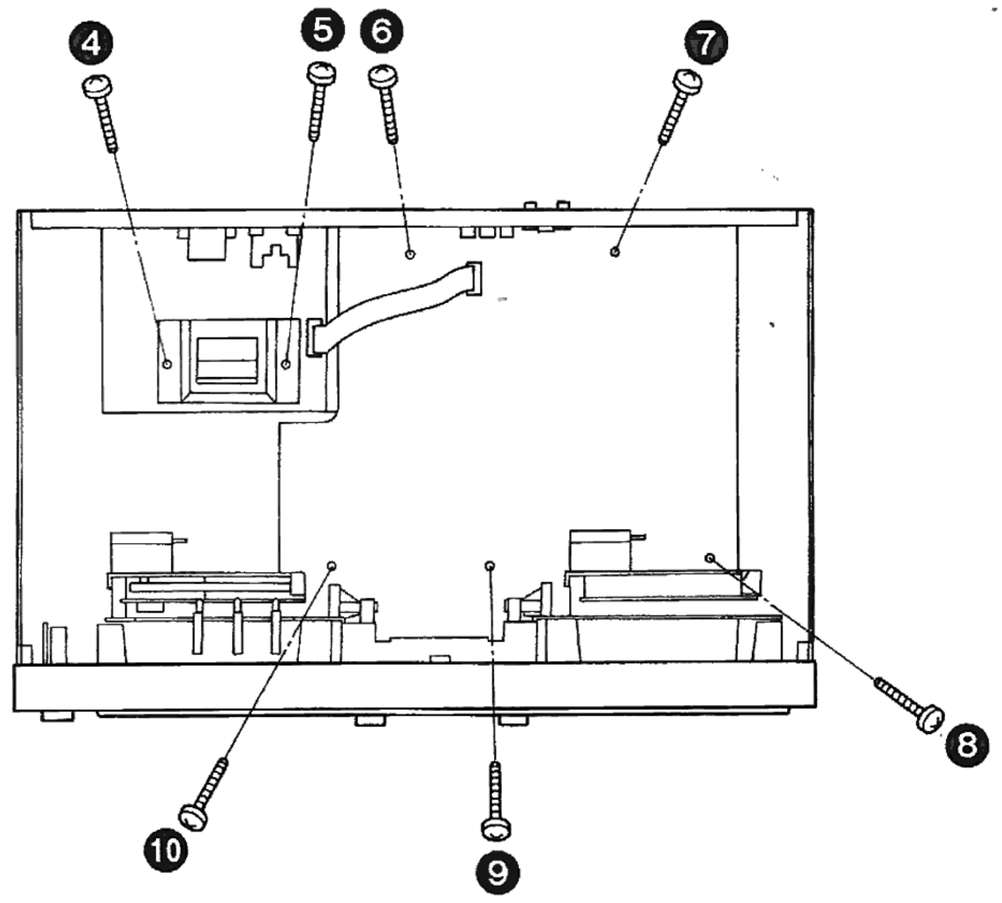

2. Remove the 7 screws (❹~❿).

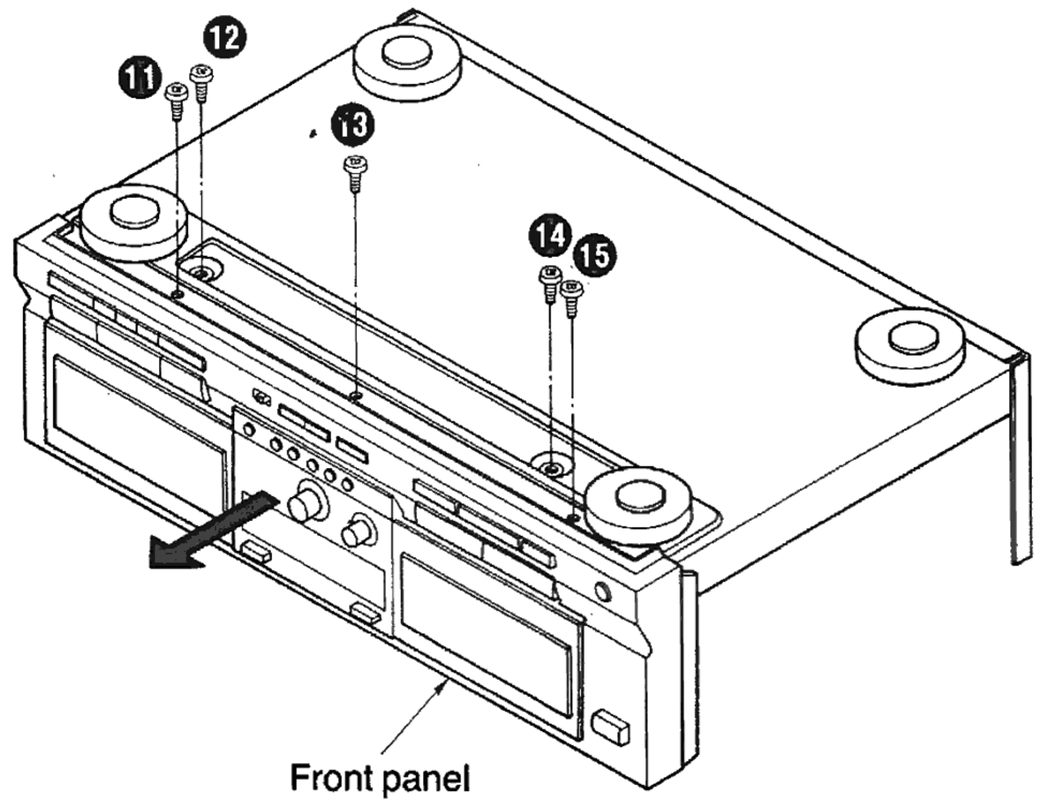

3. Remove the 5 screws (⓫~⓯).
4. Remove the front panel in the direction of the arrow.

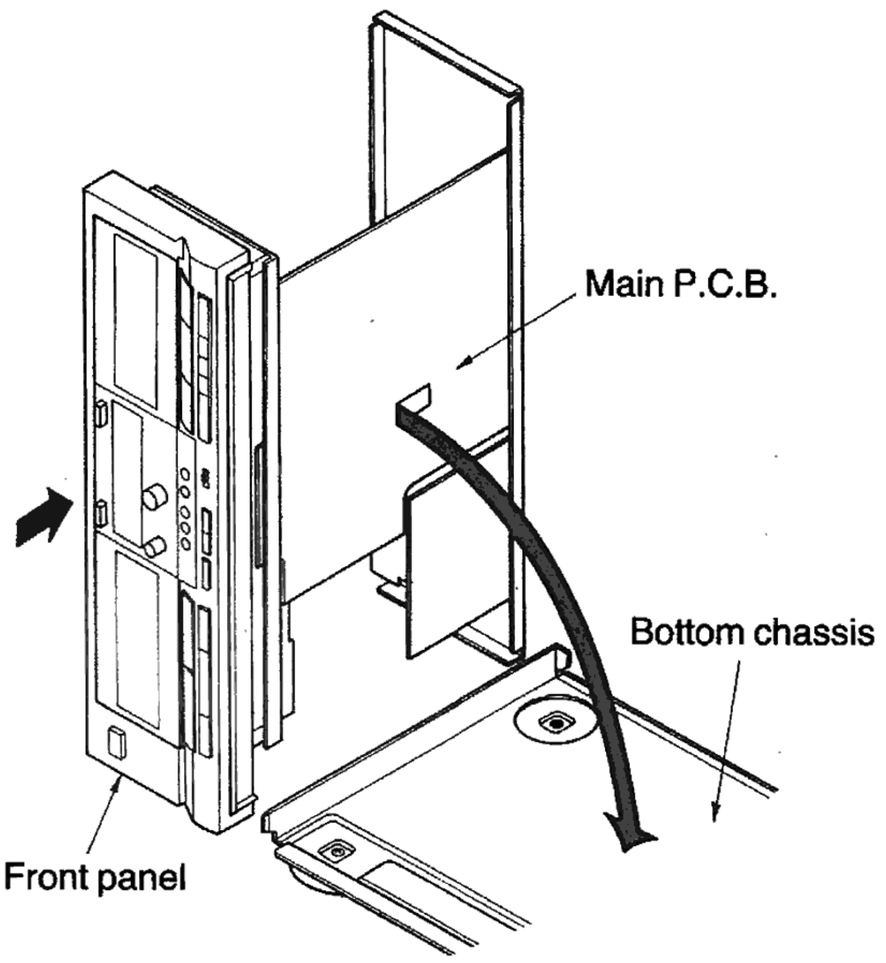

5. Remove the bottom chassis.
6. Reinstall the front panel to the main P.C.B.

●Replacement of the Foot.

1. Remove the 4 heat melted posts on the chassis with a pair of nippers or similar tool.
2. To replace the foot (RKA0009-1) on the chassis, melt the 4 posts with a soldering iron.

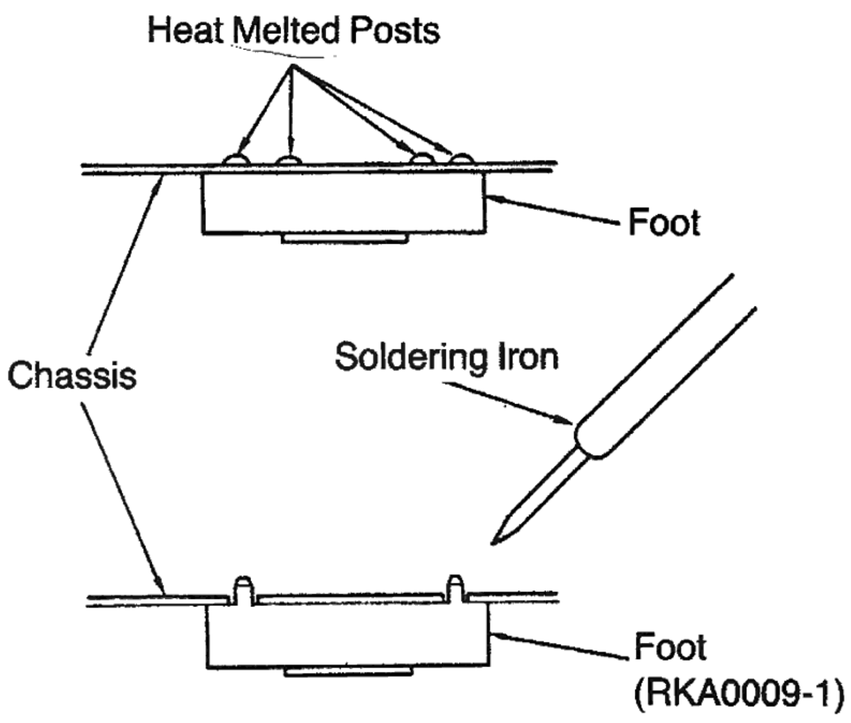

www.hifiengine.com

■ MEASUREMENTS AND ADJUSTMENTS

Measurement Condition

- Rec. level control; Maximum
- Timer switch; Off
- Reverse-mode selector switch; ⇄
- Edit-recording tape-speed selector; X1
- Dolby NR switch; Off
- Make sure heads are clean
- Make sure capstan and pressure roller are clean
- Judgeable room temperature 20±5℃ (68±9°F)

Measuring Instrument

- EVM (Electronic Voltmeter)
- Oscilloscope
- Digital frequency counter
- AF oscillator
- ATT (Attenuator)
- DC voltmeter
- Resistor (600Ω)

Test tape

- Head azimuth adjustment (8kHz, −20dB); QZZCFM
- Tape speed adjustment (3kHz, −10dB); QZZCWAT
- Playback frequency response (315Hz, 12.5kHz, 10kHz, 8kHz, 4kHz, 1kHz, 250Hz, 125Hz, 63Hz, −20dB); QZZCFM
- Playback gain adjustment (315Hz, 0dB); QZZCFM
- Overall frequency response, Overall gain adjustment
  Normal reference blank tape ; QZZCRA
  CrO_2 reference blank tape; QZZCRX
  Metal reference blank tape; QZZCRZ

• Adjustment Points

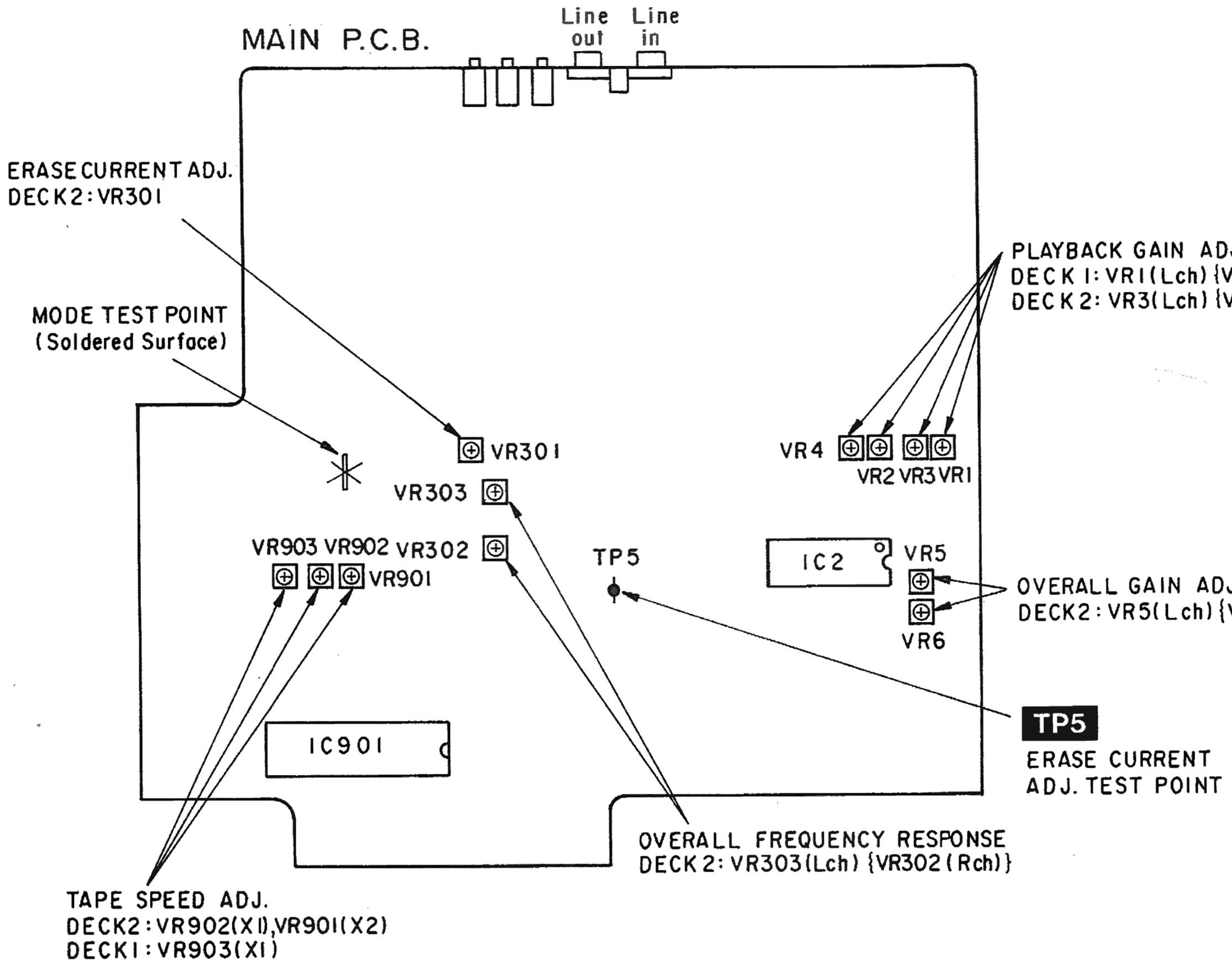

www.hifiengine.com

HEAD AZIMUTH ADJUSTMENT (DECK 2/1) (FWD)

1. Playback the azimuth adjustment portion (8 kHz, −20 dB) of the test tape (QZZCFM). Vary the azimuth adjusting screw until the outputs of the L-CH and R-CH are maximized and the lissajous waveform, as illustrated, approaches 0 degrees.

Note: If L-CH and R-CH are not maximized at the same point, adjust to the point where the levels of each channel are maximized and equal.

2. Perform the same adjustment in the play mode.
3. After the adjustment, apply screwlock to the azimuth adjusting screw.

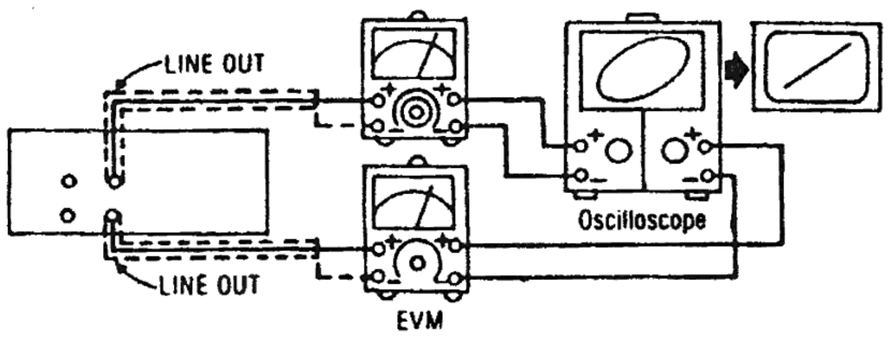

Fig. 1

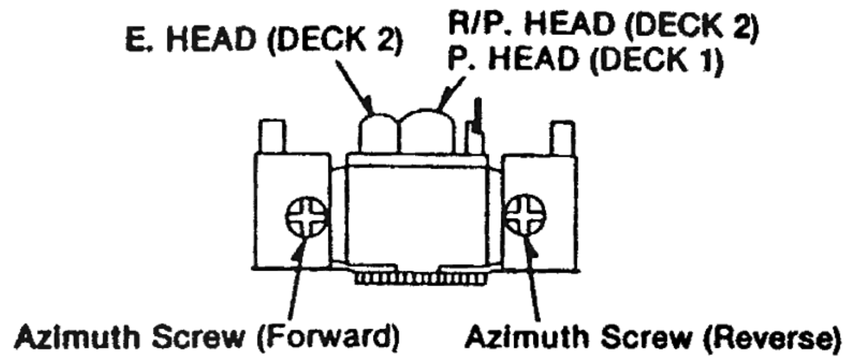

Fig. 2

TAPE SPEED ADJUSTMENT (DECK 2/1) (FWD)

Normal speed

1. Shift the edit-recordihg tape-speed selector to "**X1**" .
2. Playback the middle portion of the test tape (QZZCWAT).
3. Adjust Deck 1=**VR903** and Deck 2=**VR902** so that the output is within the standard value.

High speed

4. Shift the edit-recording tape speed switch to "**X2**".
5. Playback the middle portion of the test tape (QZZCWAT).
6. Adjust Deck 2=**VR901** so that the output is within the standard value.

Note: The Normal speed adjustment must be done before the High speed adjustment.

Standard value: 3000 ± 15 Hz (Normal), 6000 ± 630 Hz (High)

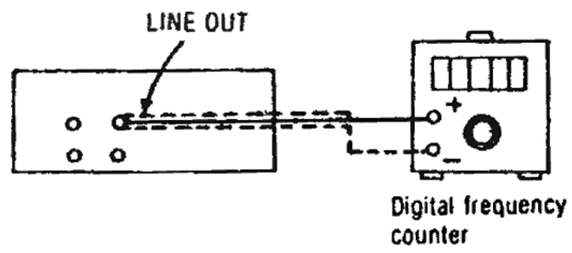

Fig. 3

PLAYBACK GAIN ADJUSTMENT (DECK 2/1) (FWD)

1. Playback the gain adjusted portion (315 Hz, 0 dB) of the test tape (QZZCFM).
2. Adjust Deck 1=**VR1** (L-CH) [**VR2** (R-CH)] and Deck 2=**VR3** (L-CH) [**VR4** (R-CH)] so that the output is within the standard value.

Standard value: 0.4 V ± 0.5 dB

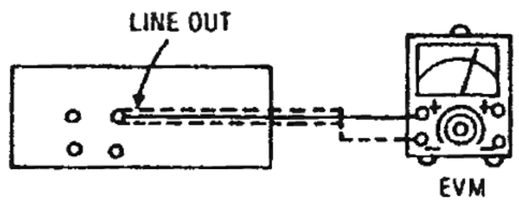

Fig. 4

PLAYBACK FREQUENCY RESPONSE (DECK 2/1) (FWD)

1. Playback the frequency response portion (315 Hz, 12.5 kHz~63 Hz, −20 dB) of the test tape (QZZCFM).
2. Assure that the frequecy response is within the range shown in **Fig. 6** for both L-CH and R-CH.

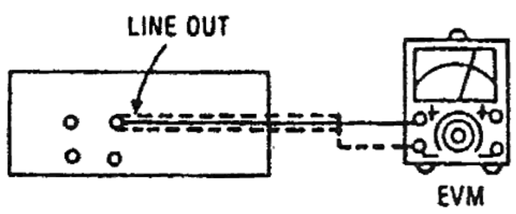

Fig. 5

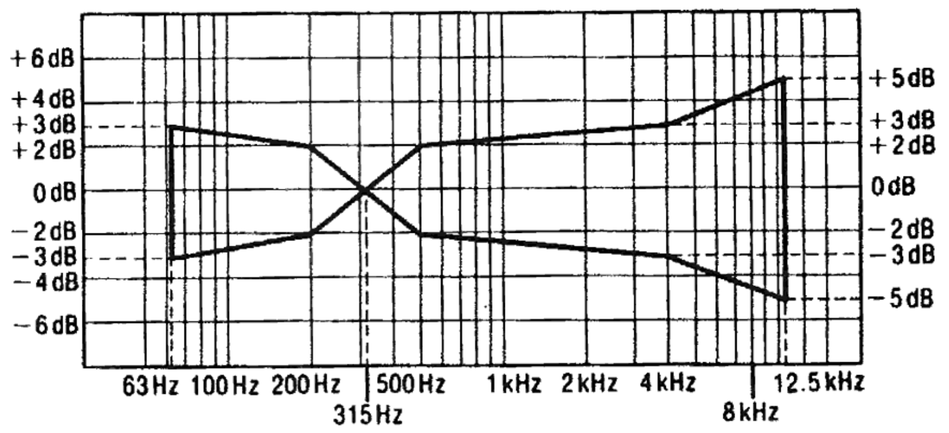

Fig. 6

www.hifiengine.com

ERASE CURRENT ADJUSTMENT (DECK 2) (FWD)

1. Insert the Metal blank test tape (QZZCRZ) and set the unit to the Record Pause mode.
2. Adjust **VR301** so that the output between TP5 and GND is within the standard value.

Standard value: 190±5mA (Metal)...EVM Reading: 190±5mV

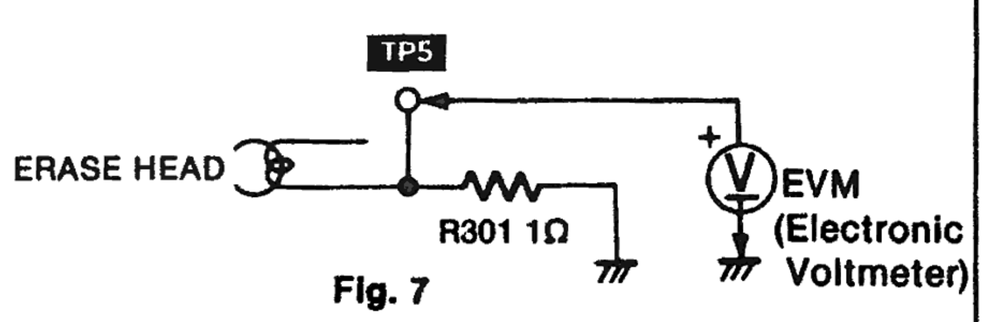

Fig. 7

OVERALL FREQUENCY RESPONSE (DECK 2) (FWD)

1. Insert the Normal blank test tape (QZZCRA) and set the unit to the Record Pause mode.
2. Apply a reference input signal (1kHz, −24dB) through an attenuator.
3. Attenuate the signal by 20dB and adjust the frequency from 50Hz~10kHz.
4. Record the frequency sweep.
5. Playback the recorded signal and assure that it is within the range shown in **Fig. 8** in comparison to the reference frequency (1kHz).
6. If it is not within the standard range, adjust **VR303** (L-CH) and **VR302** (R-CH) so that the frequency level is within the standard range.
   - Level up in high frequency range .....Increase the bias current.
   - Level down in high frequency range ...Decrease the bias current.
7. Repeat steps 2~6 above using the CrO_2 tape (QZZCRX) and the Metal tape (QZZCRZ) increasing the frequency range to 12.5kHz (50Hz~12.5kHz).
8. Assure that the level is within the range shown in **Fig. 9**.

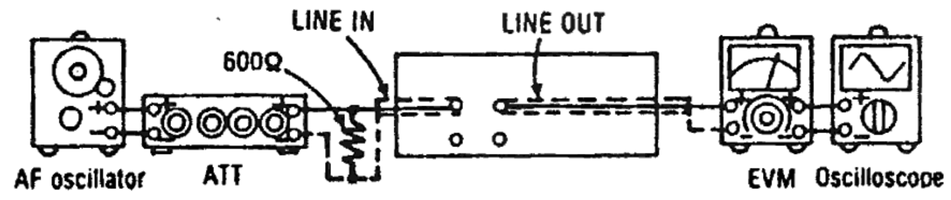

Fig. 10

Normal Overall frequency response chart (NR OUT)

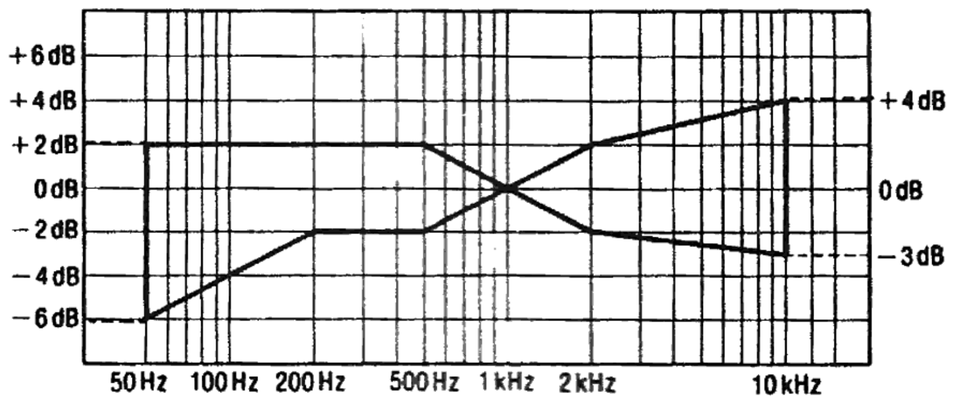

Fig. 8

CrO_2/Metal Overall frequency response chart (NR OUT)

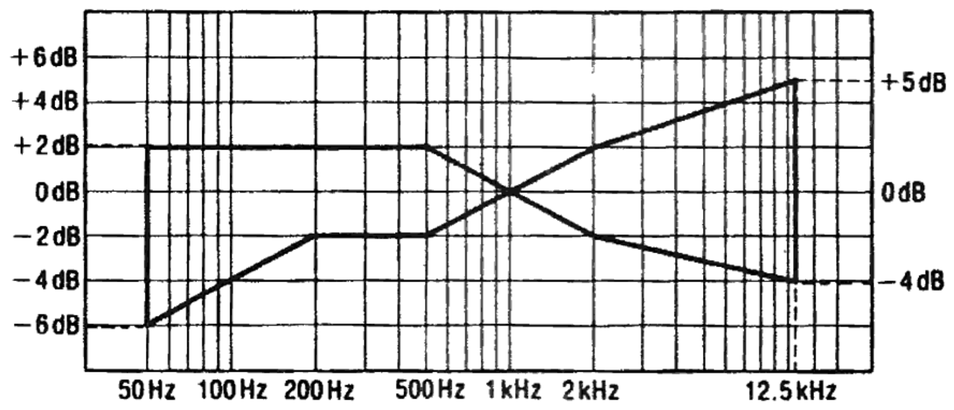

Fig. 9

OVERALL GAIN ADJUSTMENT (DECK 2) (FWD)

1. Insert the Normal blank test tape (QZZCRA) and set the unit to the Record pause mode.
2. Apply a reference input signal (1kHz, −24dB). Attenuate the output so that its level becomes 0.4V.
3. Record this input signal.
4. Playback the signal recorded in step 3 above, and assure that the output is within the standard value.
5. If it is not within the standard value, adjust VR5 (L-CH) and VR6 (R-CH).
6. Repeat the step 2~5 above until the output is within the standard value.

Standard value: 0.4V±0.5dB

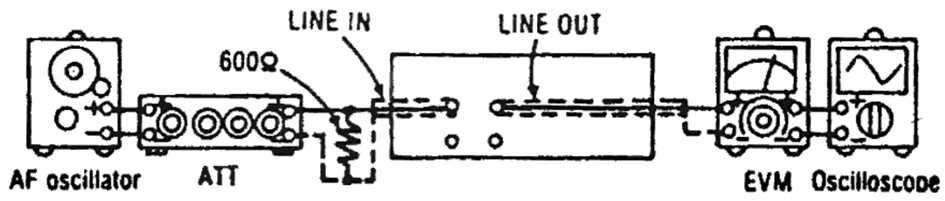

Fig. 11

www.hifiengine.com

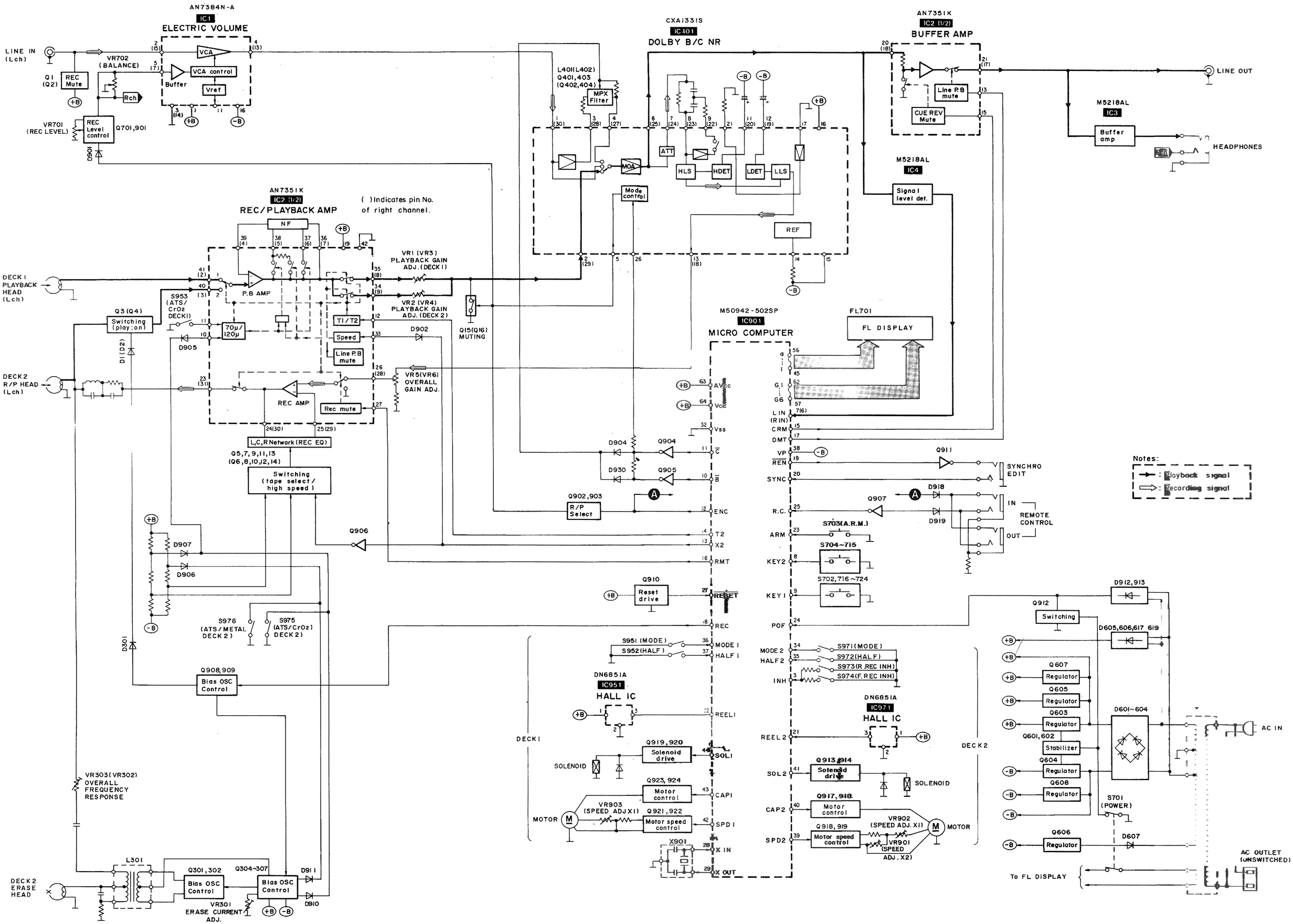
AN7384N-A
IC1
ELECTRIC VOLUME
LINE IN (Lch)
VR702 (BALANCE)
Q1 (Q2)
REC Mute
Rch
VCA
VCA control
Buffer
Vref
VR701 (REC LEVEL)
REC Level control
Q701,901
CXA1331S
IC401
DOLBY B/C NR
L401(L402) Q401,403 (Q402,404)
MPX Filter
MOA
ATT
HLS
HDET
LDET
LLS
Mode control
REF
AN7351K
IC2 (1/2)
BUFFER AMP
Line P.B mute
CUE REV Mute
LINE OUT
M5218AL
IC3
Buffer amp
HEADPHONES
M5218AL
IC4
Signal level det.
AN7351K
IC2 (1/2)
REC/PLAYBACK AMP
( ) Indicates pin No. of right channel.
NF
P.B AMP
VR1 (VR3) PLAYBACK GAIN ADJ. (DECK 1)
VR2 (VR4) PLAYBACK GAIN ADJ. (DECK 2)
DECK 1 PLAYBACK HEAD (Lch)
S953 (ATS/CrO2 DECK1)
Q3 (Q4) Switching (play:on)
D1 (D2)
70μ/120μ
D905
TI/T2
Speed
Line P.B mute
D902
Q15(Q16) MUTING
DECK 2 R/P HEAD (Lch)
REC AMP
Rec mute
VR5(VR6) OVERALL GAIN ADJ.
L,C,R Network (REC EQ)
Q5,7,9,11,13 (Q6,8,10,12,14)
Switching (tape select / high speed)
Q906
D907
D906
S976 (ATS/METAL DECK 2)
S975 (ATS/CrO2) DECK 2)
D301
Q908,909 Bias OSC Control
VR303(VR302) OVERALL FREQUENCY RESPONSE
L301
DECK 2 ERASE HEAD
Q301,302 Bias OSC Control
Q304~307 Bias OSC Control
D911
D910
VR301 ERASE CURRENT ADJ.
D904
Q904
D930
Q905
Q902,903 R/P Select
Q910 Reset drive
RESET
REC
S951 (MODE)
S952 (HALF)
MODE 1
HALF 1
DN6851A
IC951
HALL IC
REEL 1
Q919,920 Solenoid drive
SOLENOID
Q923,924 Motor control
VR903 (SPEED ADJ X1)
Q921,922 Motor speed control
MOTOR
SPD 1
X901
X IN
X OUT
DECK 1
M50942-502SP
IC901
MICRO COMPUTER
FL701
FL DISPLAY
AVcc
Vcc
Vss
C
B
ENC
T2
X2
RMT
REC
MODE 1
HALF 1
REEL 1
SOL1
CAP1
SPD 1
X IN
X OUT
LIN (RIN)
CRM
DMT
VP
REN
SYNC
R.C.
ARM
KEY2
KEY 1
POF
Q911
SYNCHRO EDIT
Q907
D918
D919
IN
OUT
REMOTE CONTROL
S703(A.R.M.)
S704~715
S702,716~724
MODE 2
HALF 2
INH
S971(MODE)
S972(HALF)
S973(R.REC INH)
S974(F.REC INH)
DN6851A
IC971
HALL IC
REEL 2
SOL2
CAP2
SPD 2
Q913,914 Solenoid drive
Q917,918 Motor control
Q918,919 Motor speed control
VR902 (SPEED ADJ. X1)
VR901 (SPEED ADJ. X2)
DECK 2
Notes:
: Playback signal
: Recording signal
D912,913
Q912 Switching
D605,606,617 619
Q607 Regulator
Q605 Regulator
Q603 Regulator
Q601,602 Stabilizer
Q604 Regulator
Q608 Regulator
Q606 Regulator
D601~604
AC IN
S701 (POWER)
D607
AC OUTLET (UNSWITCHED)
To FL DISPLAY

■ SCHEMATIC DIAGRAM

(This schematic diagram may be modified at any time with the development of new technology.)

Notes:

- S1 (JK703) : Voltage selector switch in **"240 V"** position. (110 V/127 V/220 V/240 V) **(GC) area only**
- S701 : Power switch in **"on"** position.
- S702 : Timer switch in **"rec"** position. (rec/off/play)
- S703 : Auto rec mute switch.
- S704 : DECK 2 ■ STOP switch.
- S705 : DECK 2 ▶▶ CUE/REVIEW switch.
- S706 : DECK 2 ◀◀ CUE/REVIEW switch.
- S707 : DECK 2 ▶ Play switch.
- S708 : DECK 2 ◀ Play switch.
- S709 : DECK 2 ● REC switch.
- S710 : DECK 2 ❚❚ PAUSE switch.
- S711 : Synchro-start swich.
- S712 : Editing tape speed (×1) switch.
- S713 : Editing tape speed (×2) switch.
- S714 : Dolby NR B switch.
- S715 : Dolby NR C switch.
- S716 : DECK 1 ■ STOP switch.
- S717 : DECK 1 ▶▶ CUE switch.
- S718 : DECK 1 ◀◀ REVIEW switch.
- S719 : DECK 1 ▶ Play switch.
- S721 : Reverse mode (⇉) switch.
- S722 : Reverse mode (⬭) switch.
- S723 : Reverse mode (∞) switch.
- S724 : DECK 2 COUNTER RESET 2 switch.
- S951 : DECK 1 Mode switch in **"off"** position.
- S952 : DECK 1 Cassette half detection switch in **"off"** position.
- S953 : DECK 1 ATS (CrO₂) switch in **"off"** position.
- S971 : DECK 2 Mode switch in **"off"** position.
- S972 : DECK 2 Cassette half detection switch in **"off"** position.
- S973 : DECK 2 Rev. Rec Inhibit switch in **"off"** position.
- S974 : DECK 2 For. Rec Inhibit switch in **"off"** position.
- S975 : DECK 2 ATS (CrO₂) switch in **"off"** position.
- S976 : DECK 2 ATS (Metal) switch in **"off"** position.

- Indicated voltage values are the standard values for the unit measured by the DC electronic circuit tester (high-impedance) with the chassis taken as standard. Therefore, there may exist some errors in the voltage values, depending on the internal impedance of the DC circuit tester.
- No mark...Playback ( )...Recording
- ▬▬ : Positive voltage lines ▬ ▬ : Negative voltage lines
- ▭▭ : Record signal lines ▭▭ : Playback signal lines

- Important safety notice:
  Components identified by ⚠ mark have special characteristics important for safety. When replacing any of these components, use only manufacturer's specified parts.

- The supply part number is described alone in the replacement parts list.

Ref. No.	Production Part No.	Supply Part No.
IC1	AN7384N-A	AN7384
IC3, IC4	M5218AL	M5218L

•Caution!
IC and LSI are sensitive to static electricity.
Secondary trouble can be prevented by taking care during repair.
- Cover the parts boxes made of plastics with aluminum foil.
- Ground the soldering iron.
- Put a conductive mat on the work table.
- Do not touch the legs of IC or LSI with the fingers directly.

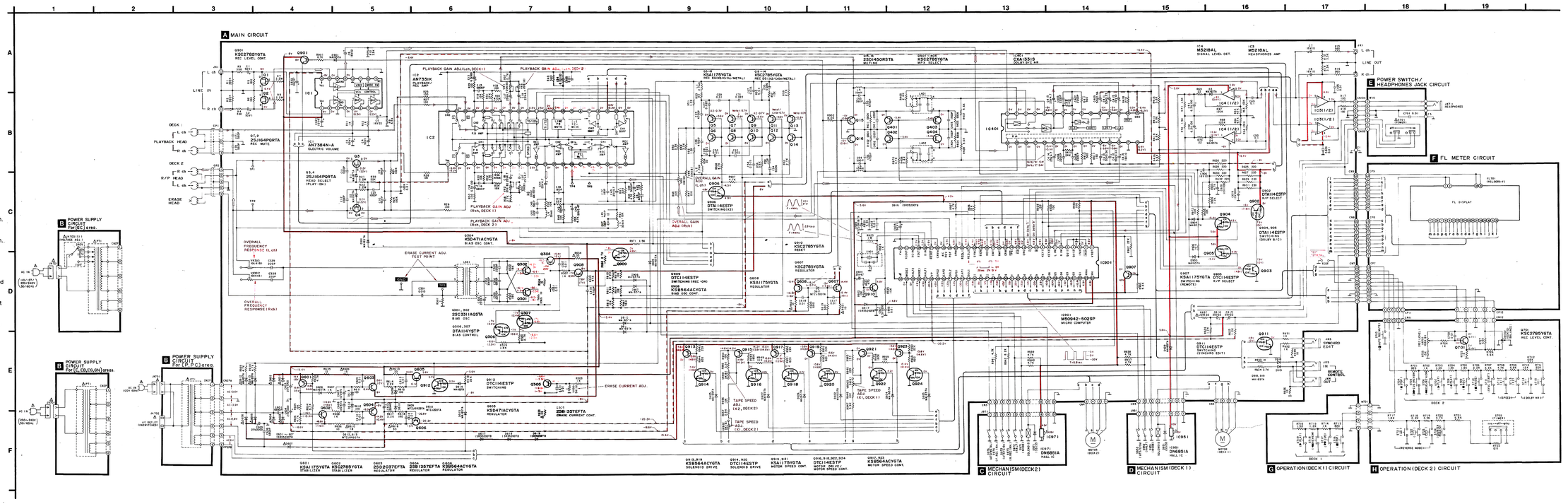
A MAIN CIRCUIT
B POWER SUPPLY CIRCUIT For (E, EB, EG, GN) areas.
B POWER SUPPLY CIRCUIT For (P, PC) area
C MECHANISM(DECK2) CIRCUIT
D MECHANISM(DECK1) CIRCUIT
E POWER SWITCH/ HEADPHONES JACK CIRCUIT
F FL METER CIRCUIT
G OPERATION(DECK1) CIRCUIT
H OPERATION (DECK 2) CIRCUIT
LINE IN
LINE OUT
DECK 1
DECK 2
PLAYBACK HEAD
R/P HEAD
ERASE HEAD
Q901 KSC2785YGTA REC LEVEL CONT.
IC1 AN7384N-A ELECTRIC VOLUME
IC2 AN7351K PLAYBACK/ REC AMP.
Q5,6 2SJ164PORTA HEAD SELECT (PLAY ON)
Q7,8 2SJ164PORTA REC MUTE
PLAYBACK GAIN ADJ(ch_DECK1)
PLAYBACK GAIN ADJ. (ch_DECK 2)
OVERALL FREQUENCY RESPONSE(1 ch)
OVERALL FREQUENCY RESPONSE(2 ch)
ERASE CURRENT ADJ. TEST POINT
Q304 DTA114ESTP SWITCHING(REC-ON)
Q305 KSA1175YGTA REGULATOR
Q306 KSD471ACYGTA BIAS OSC CONT.
Q307 DTA114YSTP BIAS CONTROL
Q308 KSB564ACYGTA BIAS OSC CONT.
Q309,310 2SC3311AGSTA BIAS OSC
Q311 2SB1357EFTA REGULATOR
Q312 DTC114ESTP SWITCHING
Q313 KSD471ACYGTA REGULATOR
Q314 2SB1357EFTA ERASE CURRENT CONT.
Q315 KSB564ACYGTA REGULATOR
Q401 2SD1450RSTA MUTING
Q402 KSC2785YGTA MPX SELECT
IC401 CXA1331R DOLBY B/C NR
IC3 M5218AL SIGNAL LEVEL DET.
IC4 M5218AL HEADPHONES AMP
Q901 DTA114ESTP R/P SELECT
Q902 DTA114ESTP SWITCHING (REMOTE)
Q903 KSA1175YGTA SWITCH(ING (REMOTE)
Q904,905 DTA114ESTP SWITCHING (DELAY B/C)
Q906 DTA114ESTP R/P SELECT
Q907 KSA1175YGTA REGULATOR
Q908 KSC2785YGTA RESET
Q909 DTA114ESTP SWITCHING(REC-ON)
Q910 KSA1175YGTA REGULATOR
IC901 M50942-502SP MICRO COMPUTER
Q911 DTC114ESTP SWITCHING (SYNCHRO EDIT)
Q912 DTA114ESTP SWITCHING (REMOTE SENSOR, OUT)
Q701 KSC2785YGTA REC LEVEL CONT.
Q913,919 KSB564ACYGTA SOLENOID DRIVE
Q914,920 DTC114ESTP SOLENOID DRIVE
Q915,921 KSA1175YGTA MOTOR SPEED CONT.
Q916,922 TAPE SPEED ADJ. (DECK 2)
Q917,923 TAPE SPEED ADJ. (DECK 1)
Q918,924 DTC114ESTP MOTOR SPEED CONT.
Q919,925 KSB564ACYGTA MOTOR SPEED CONT.
Q920,926 KSB564ACYGTA MOTOR SPEED CONT.
Q921,927 KSB564ACYGTA MOTOR SPEED CONT.
Q922,928 KSB564ACYGTA MOTOR SPEED CONT.
Q923,929 KSB564ACYGTA MOTOR SPEED CONT.
Q924,930 KSB564ACYGTA MOTOR SPEED CONT.
Q925,931 KSB564ACYGTA MOTOR SPEED CONT.
Q926,932 KSB564ACYGTA MOTOR SPEED CONT.

■ PRINTED CIRCUIT BOARDS

A MAIN P.C.B.

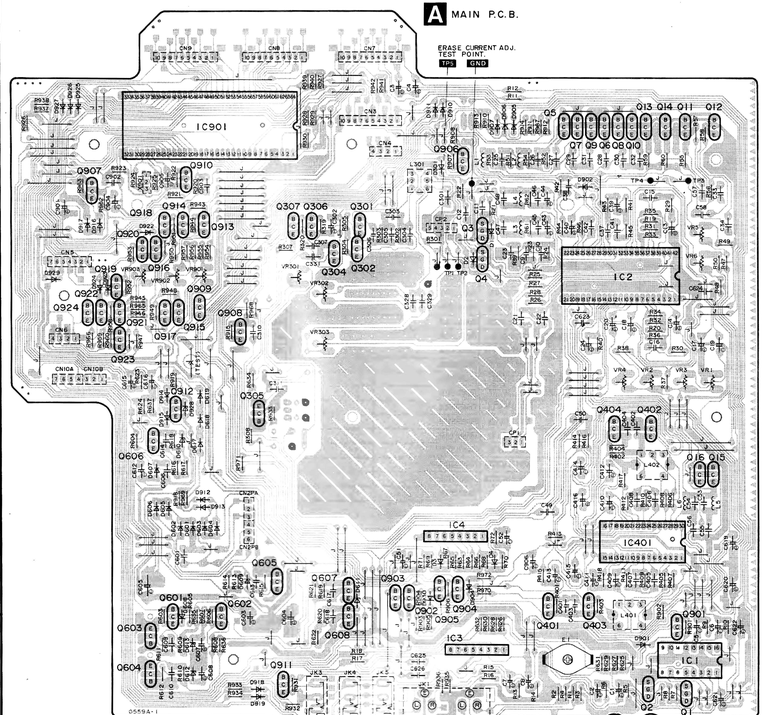

■ WIRING CONNECTION DIAGRAM

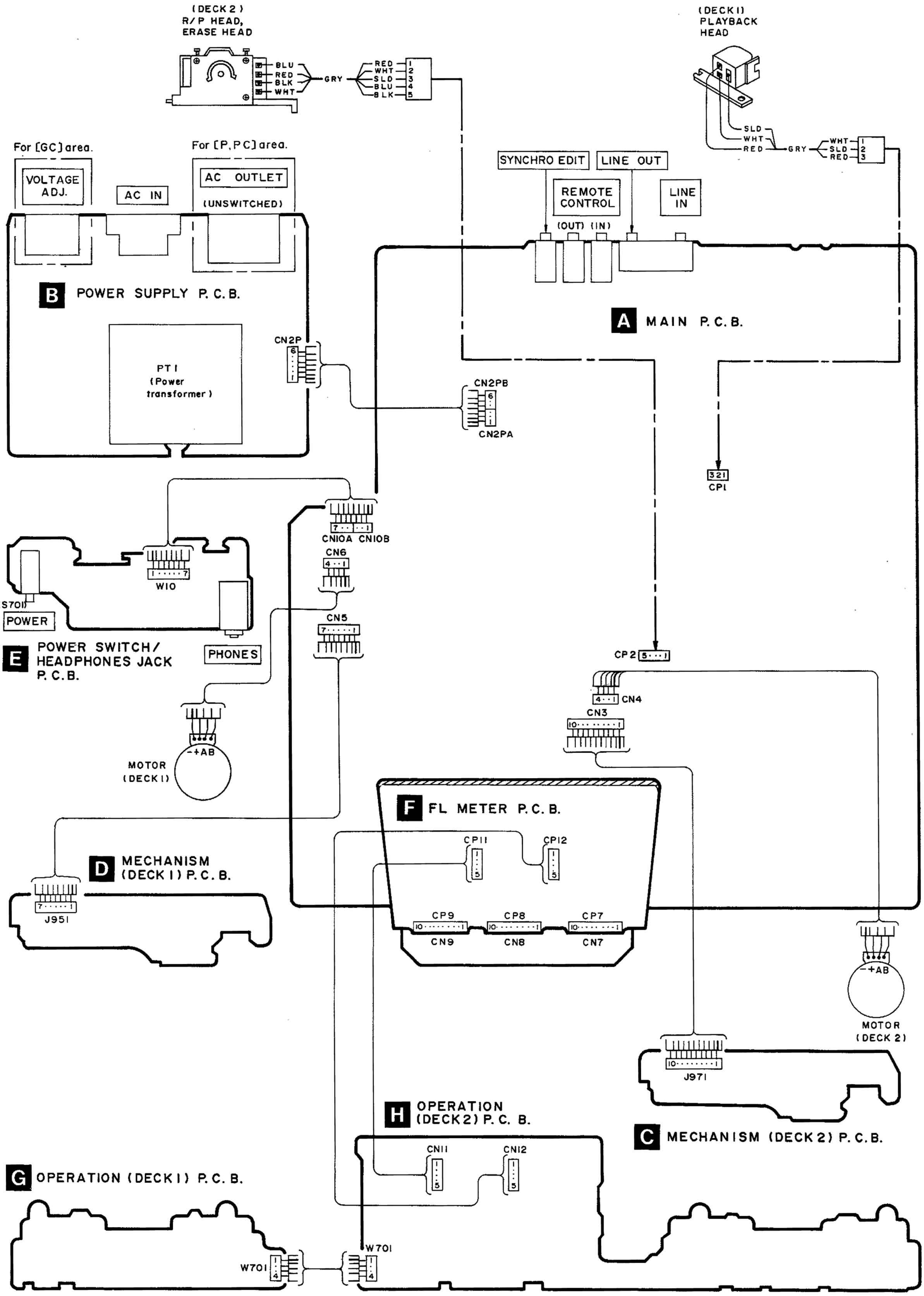

www.hifiengine.com

■ DESCRIPTION OF FL PANEL [FL701 (RSL0086-F)]

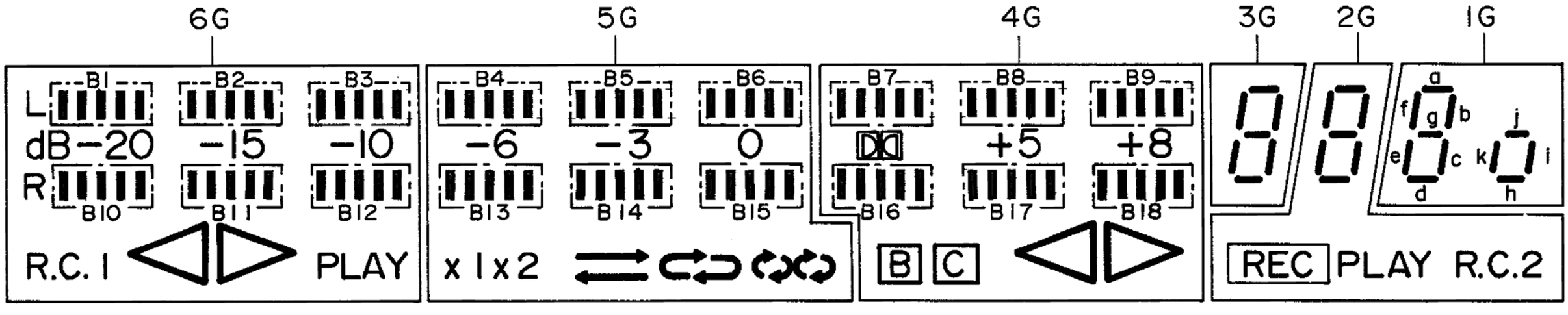

●Pin connection

PIN NO.	35	34	33	32	31	30	29	28	27	26	25	24	23	22	21	20	19	18	17	16	15	14	13	12	11	10	9	8	7	6	5	4	3	2	1
CONNECTION	F2	F2	NP	P1	P2	P3	P4	P5	P6	P7	P8	P9	P10	P11	P12	NC	NC	NC	NC	NC	NC	NC	NC	NC	NC	NC	NC	6G	5G	4G	3G	2G	1G	NP	F1	F1

Note

1) F1, F2 ..... Filament
2) NP ..... No pin
3) NC ..... No connection
4) 1G~6G ..... Grid

●ANODE CONNECTION

	6G	5G	4G	3G	2G	1G
P1	B1	B4	B7	a	a	a
P2	B2	B5	B8	b	b	b
P3	B3	B6	B9	c	c	c
P4	B10	B13	B16	d	d	d
P5	B11	B14	B17	e	e	e
P6	B12	B15	B18	f	f	f
P7	R.C. 1	x 1	B	g	g	g
P8	◁	x 2	C	—	REC	h
P9	▷	⇄	◁	—	PLAY	i
P10	PLAY	⊂⊃	▷	—	R.C.2	j
P11	—	⊂⊃	—	—	—	k
P12	L dB -20 -15 -10 R	-6 -3 0	⊠ +5 +8	—	—	—

www.hifiengine.com

■ FUNCTIONS OF IC TERMINALS

•IC901 (M50942-502SP): MICROCOMPUTER

Pin No.	Mark	I/O	Description
1	V_{REF}	I	Standard voltage terminal (5 V)
2	$\overline{1\ WAY}$ REV	I	Model select input terminal D1 1 way..."L", D1 Reverse..."H"
3	INH	I	Deck 2 Forward/Reverse Rec. Inh. switch select terminal
4	QUI 2	I	Connected to GND
5	QUI 1		
6	R IN	I	Line signal level input terminal
7	L IN		
8	KEY 2	I	Key switch scan (DECK 1: STOP, F.F., REW, F. PLAY, R. PLAY, REVERSE MODE, TIMER R/P)
9	KEY 1	I	Key switch scan (DECK 2: STOP. F.F., REW, F. PLAY, R. PLAY, REC., PAUSE, S. START, ×2, ×1, DOLBY NR)
10	$\overline{B}$	O	DOLBY NR amp. select terminal ●DOLBY "B"..."L", etc...."H"
11	$\overline{C}$	O	DOLBY NR amp. select terminal ●DOLBY "C"..."L", etc...."H"
12	ENC	O	Encode/Decode select terminal ●"H" level in encode mode ●"L" level in decode mode
13	$\overline{X2}$	O	×2 Speed select terminal ●"×2"..."L", etc..."H"
14	$\overline{TP2}$	O	Deck 2 play select terminal ●"L" level with PLAY/CUE/REVIEW mode ●"H" level with any other mode
15	CRM	O	CUE/REV mute terminal ●"L" level in muting is off mode ●"H" level in muting is on mode
16	RMT	O	Rec. amp. mute signal of deck 2 ●"L" level in mute is off mode ●"H" level in mute is on mode
17	DMT	O	Line out mute signal ●"L" level in muting is off mode ●"OPEN" when muting is on mode
18	REC	O	Rec. mode output terminal ●"L" level in REC. mode ●"H" level in any other mode
19	$\overline{REN}$	O	Rec. Enable output terminal ●"L" level in REC. mode ●"H" level in any other mode
20	SYNC	I	Synchro start signal input terminal ●"L"...Synchro start
21	REEL 2	I	Rotation pulse signal of reel table
22	REEL 1		
23	ARM	I	Auto rec. mute terminal ●"L"...key "on"
24	$\overline{POF}$	I	Primary AC power detection terminal ●"L"...off

Pin No.	Mark	I/O	Description
25	R.C	I	Remote control serial data
26	CN V_{SS}	I	Connected to V_{SS}
27	$\overline{RESET}$	I	Reset input terminal ●"L"...Reset "on"
28	X IN	I	Clock OSC termianl (4 MHz)
29	X OUT	O	
30	XC IN	I	Connected to V_{SS}
31	XC OUT	O	———
32	V_{SS}	I	Connected to GND
33	——	—	———
34	MODE 2	I	Deck 2 mechanism mode switch select terminal ●"L"...PLAY, F.F., REW mode
35	HALF 2	I	Deck 2 cassette half detection switch ●"L" level in half detection switch in on mode ●"H" level in half detection switch in off mode
36	MODE 1	I	Deck 1 mechanism mode switch select terminal ●"L"...PLAY, F.F., REW mode
37	HALF 1	I	Deck 1 cassette half detection switch ●"L" level in half detection switch is on mode ●"H" level in half detection switch is off mode
38	VP	I	Pull down power supply terminal (—V_{CC})
39	SPD 2	O	Deck 2 motor speed select terminal ●"L" level in "×2" mode ●"H" level in "×1" mode
40	CAP 2	O	Deck 2 motor ON/OFF control terminal ●"H" level in "ON"
41	SOL 2	O	Deck 2 solenoid ON/OFF control terminal ●"H" level in "ON"
42	SPD 1	O	Deck 1 motor speed select terminal ●"L" level in "×2" mode ●"H" level in "×1" mode
43	CAP 1	O	Deck 1 motor ON/OFF control terminal ●"H" level in "ON"
44	SOL 1	O	Deck 1 solenoid ON/OFF control terminal ●"H" level in "ON"
45 ≀ 56	a ≀ I	O	Segment signal for FL display
57 ≀ 62	G1 ≀ G6	O	Grid signal for FL display
63	A V_{CC}	I	Power supply terminal (A/D)
64	V_{CC}	I	Power supply terminal

www.hifiengine.com

■ REPLACEMENT PARTS LIST

Notes : * Important safety notice:
Components identified by ⚠ mark have special characteristics important for safety. When replacing any of these components use only manufacturer's specified parts.
* The parenthesized indications in the Remarks columns specify the areas. (Refer to the cover page for area.)
Parts without these indications can be used for all areas.

Ref. No.	Part No.	Part Name & Description	Remarks
		INTEGRATED CIRCUIT(S)	
IC1	AN7384	I. C, VOLUME CONTROL	
IC2	AN7351K	I. C, REC. /PLAYBACK AMP.	
IC3, 4	M5218L	I. C, HEADPHONES AMP.	
IC401	CXA1331S	I. C, DOLBY NR	
IC901	M50942-502SP	I. C, MICROCOMPUTER	
IC951	DN6851A	I. C, HALL	
IC971	DN6851A	I. C, HALL	
		TRANSISTOR(S)	
Q1-4	2SJ164PQRTA	TRANSISTOR	
Q5-8	KSA1175YGTA	TRANSISTOR	
Q9	KSC2785YGTA	TRANSISTOR	
Q10-14	KSC2785YGTA	TRANSISTOR	
Q15, 16	2SD1450RSTA	TRANSISTOR	
Q301, 302	2SC3311A-Q	TRANSISTOR	
Q304	KSD471ACYGTA	TRANSISTOR	
Q305	2SB1357EFTA	TRANSISTOR	
Q306, 307	DTA114YSTP	TRANSISTOR	
Q401-404	KSC2785YGTA	TRANSISTOR	
Q601	KSA1175YGTA	TRANSISTOR	
Q602	KSC2785YGTA	TRANSISTOR	
Q603	2SD2037EFTA	TRANSISTOR	
Q604	2SB1357EFTA	TRANSISTOR	
Q605	KSD471ACYGTA	TRANSISTOR	
Q606	KSB564ACYGTA	TRANSISTOR	
Q607	KSC2785YGTA	TRANSISTOR	
Q608	KSA1175YGTA	TRANSISTOR	
Q701	KSC2785YGTA	TRANSISTOR	
Q901	KSC2785YGTA	TRANSISTOR	
Q902	DTA114ESTP	TRANSISTOR	
Q903	DTC114ESTP	TRANSISTOR	
Q904-906	DTA114ESTP	TRANSISTOR	
Q907	KSA1175YGTA	TRANSISTOR	
Q908	KSB564ACYGTA	TRANSISTOR	
Q909	DTC114ESTP	TRANSISTOR	
Q910	KSC2785YGTA	TRANSISTOR	
Q911, 912	DTC114ESTP	TRANSISTOR	
Q913	KSB564ACYGTA	TRANSISTOR	
Q914	DTC114ESTP	TRANSISTOR	
Q915	KSA1175YGTA	TRANSISTOR	
Q916	DTC114ESTP	TRANSISTOR	
Q917	KSB564ACYGTA	TRANSISTOR	
Q918	DTC114ESTP	TRANSISTOR	

Ref. No.	Part No.	Part Name & Description	Remarks
Q919	KSB564ACYGTA	TRANSISTOR	
Q920	DTC114ESTP	TRANSISTOR	
Q921	KSA1175YGTA	TRANSISTOR	
Q922	DTC114ESTP	TRANSISTOR	
Q923	KSB564ACYGTA	TRANSISTOR	
Q924	DTC114ESTP	TRANSISTOR	
		DIODE(S)	
D1, 2	MA167	DIODE	
D3, 4	MA165	DIODE	
D301	MA165	DIODE	
D601-607	1SR35200TB	DIODE	⚠
D608	MA165	DIODE	
D609	MTZJ6R2BTA	DIODE	
D610	MTZJ20DTA	DIODE	
D611	MTZJ30DTA	DIODE	
D612, 613	MTZJ8R2CTA	DIODE	
D617-619	1SR35200TB	DIODE	
D901, 902	MA165	DIODE	
D904-907	MA165	DIODE	
D910, 911	MA165	DIODE	
D912, 913	MA165	DIODE	⚠
D914, 915	MA165	DIODE	
D916, 917	1SR35200TB	DIODE	
D918, 919	MA165	DIODE	
D922-927	MA165	DIODE	
D928	MTZJ5R1BTA	DIODE	
D929, 930	MA165	DIODE	
D951	1SS133	DIODE (DECK1)	
D971	1SS133	DIODE (DECK2)	
		VARIABLE RESISTOR(S)	
VR1-4	EVNDXAA00B24	V. R, PLAYBACK GAIN ADJ.	
VR5, 6	EVNDXAA00B14	V. R, OVERALL GAIN ADJ.	
VR301	EVNDXAA00B53	V. R, ERASE CURRENT ADJ.	
VR302, 303	EVNDXAA00B15	V. R, OVERALL FREQ ADJ.	
VR701	EVJ02FF02B15	V. R, REC LEVEL CONTROL	
VR702	EVJ02SF02G15	V. R, BALANCE	
VR901-903	EVNDXAA00B53	V. R, TAPE SPEED ADJ.	
		COIL(S)	
L1, 2	SLQX272-1YT	COIL	
L3, 4	SLQX303-1KT	COIL	
L5, 6	RLQB103JT-Y	COIL	

www.hifiengine.com

Ref. No.	Part No.	Part Name & Description	Remarks
L301	SL09B4-K	COIL	
L401, 402	QLM9Z10K	COIL	
		TRANSFORMER(S)	
PT1	RTP1K4C008-V	POWER TRANSFORMER	<P, PC>⚠
PT1	RTP1K4E014-V	POWER TRANSFORMER	<E, EB, EG, GN>⚠
PT1	RTP1K4E015-V	POWER TRANSFORMER	<GC>⚠
		OSCILLATOR(S)	
X901	EFOGC4004A4	CERAMIC FILTER	
		DISPLAY TUBE	
FL701	RSL0086-F	DISPLAY TUBE	
		SWITCH(ES)	
S1(JK703)	SSR187-1	VOLTAGE SELECTOR	<GC>⚠
S701	SSH1230	POWER	⚠
S702	RSS3A18YA-H	TIMER	
S703	EVQ21405R	AUTO REC, MUTE	
S704	EVQ21405R	STOP(DECK2)	
S705	EVQ21405R	F. F. (DECK2)	
S706	EVQ21405R	REW. (DECK2)	
S707	EVQ21405R	F. PLAY(DECK2)	
S708	EVQ21405R	R. PLAY(DECK2)	
S709	EVQ21405R	REC. (DECK2)	
S710	EVQ21405R	PAUSE(DECK2)	
S711	EVQ21405R	SYNCHRO-START(DECK2)	
S712	EVQ21405R	EDITING TAPE SPEED(X1)	
S713	EVQ21405R	EDITING TAPE SPEED(X2)	
S714	EVQ21405R	DOLBY NR B	
S715	EVQ21405R	DOLBY NR C	
S716	EVQ21405R	STOP(DECK1)	
S717	EVQ21405R	F. F. (DECK1)	
S718	EVQ21405R	REW. (DECK1)	
S719	EVQ21405R	F. PLAY(DECK1)	
S721-723	EVQ21405R	REVERSE MODE	
S724	EVQ21405R	C. RESET(DECK2)	
S951	RSH1A89Z	MODE(DECK1)	
S952	RSH1A90Z	HALF(DECK1)	
S953	RSH1A90Z	ATS(DECK1)	
S971	RSH1A89Z	MODE(DECK2)	
S972	RSH1A90Z	HALF(DECK2)	
S973	RSH1A90Z	REC. INH(R)(DECK2)	
S974	RSH1A90Z	REC. INH(F)(DECK2)	
S975, 976	RSH1A90Z	ATS(DECK2)	
		CONNECTOR(S)	

Ref. No.	Part No.	Part Name & Description	Remarks
CN3	SJSD1005	CONNECTOR(10P)	
CN4	RJS1A1704	SOCKET(4P)	
CN5	RJS7T4ZA	SOCKET(7P)	
CN6	RJS1A1704	SOCKET(4P)	
CN7-9	RJU003K010M1	SOCKET(10P)	
CN11, 12	SJS50581BB	SOCKET(5P)	
CN10A	RJS1A1704	SOCKET(4P)	
CN10B	RJS1A1703	CONNECTOR (3P)	
CN2PA	RJS1A1703	CONNECTOR (3P)	
CN2PB	RJS1A1703	CONNECTOR (3P)	
CN2P	SJT30643-V	CONNECTOR (6P)	
CP1	SJTD313	CONNECTOR(3P)	
CP2	RJP5G18ZA	CONNECTOR(5P)	
CP7-9	RJT003K010M1	CONNECTOR(10P)	
CP11, 12	SJT30548BB1	CONNECTOR(5P)	
J951	RJS7T7ZA	SOCKET(7P)(DECK1)	
J971	RJS10T7ZA	SOCKET(10P)(DECK2)	
		JACK(S)	
JK1	SJF3069N	TERMINAL BOARD	
JK3	RJJ33T01	M3 JACK(BLACK)	
JK4, 5	RJJ33TR01	M3 JACK(RED)	
JK701	SJSD16	AC INLET	<P, PC, GN>⚠
JK701	SJS9236	AC INLET	<E, EB, EG, GC>⚠
JK702	SJS9331B	AC OUTLET	<P, PC>⚠
JK711	SJJ146B	HEADPHONE JACK	

www.hifiengine.com

Notes : * Capacity valuse are in microfarads (uF) unless specified otherwise, P=Pico-farads (pF) F=Farads (F)
* Resistance values are in ohms, unless specified otherwise, 1K=1,000 (OHM) , 1M=1,000k (OHM)

Ref. No.	Part No.	Values & Remarks
		RESISTORS
R1, 2	ERDS2TJ394	1/4W 390K
R3, 4	ERDS2TJ393	1/4W 39K
R5, 6	ERDS2TJ183T	1/4W 18K
R7, 8	ERDS2TJ225	1/4W 2.2M
R9	ERDS2TJ332	1/4W 3.3K
R10	ERDS2TJ332	1/4W 3.3K
R11, 12	ERDS2TJ102	1/4W 1K
R13, 14	ERDS2TJ332	1/4W 3.3K
R15, 16	ERDS2TJ561	1/4W 560
R17, 18	ERDS2TJ101	1/4W 100
R19, 20	ERDS2TJ103	1/4W 10K
R21, 22	ERDS2TJ225	1/4W 2.2M
R23, 24	ERDS2TJ104	1/4W 100K
R25-28	ERDS2TJ101	1/4W 100
R29, 30	ERDS2EJ121	1/4W 120
R31, 32	ERDS2TJ273	1/4W 27K
R33, 34	ERDS2TJ183T	1/4W 18K
R35, 36	ERDS2TJ474	1/4W 470K
R37, 38	ERDS2TJ272T	1/4W 2.7K
R39	ERDS2TJ223	1/4W 22K
R40	ERDS2TJ392T	1/4W 3.9K
R41, 42	ERDS2TJ223	1/4W 22K
R43, 44	ERDS2TJ472	1/4W 4.7K
R45-48	ERDS2TJ103	1/4W 10K
R49, 50	ERDS2TJ332	1/4W 3.3K
R51, 52	ERDS2TJ122	1/4W 1.2K
R53, 54	ERDS2TJ330	1/4W 33
R55, 56	ERDS2TJ562	1/4W 5.6K
R57, 58	ERDS2TJ152	1/4W 1.5K
R59, 60	ERDS2TJ272T	1/4W 2.7K
R61, 62	ERDS2TJ103	1/4W 10K
R63, 64	ERDS2TJ104	1/4W 100K
R65, 66	ERDS2TJ473	1/4W 47K
R67, 68	ERDS2TJ124T	1/4W 120K
R69, 70	ERDS2TJ220T	1/4W 22
R71, 72	ERDS2TJ152	1/4W 1.5K
R301	ERDS2TJ1R0	1/4W 1.0
R302, 303	ERDS2TJ183T	1/4W 18K
R304, 305	ERDS2TJ100	1/4W 10
R307, 308	ERDS2TJ102	1/4W 1K
R319	ERDS2TJ182	1/4W 1.8K
R320	ERDS2TJ272T	1/4W 2.7K
R401-404	ERDS2TJ684	1/4W 680K
R405, 406	ERDS2TJ242	1/4W 2.4K
R407, 408	ERDS2TJ562	1/4W 5.6K
R409, 410	ERDS2TJ243T	1/4W 24K
R411, 412	ERDS2TJ561	1/4W 560
R413, 414	ERDS2TJ682T	1/4W 6.8K
R415, 416	ERDS2TJ562	1/4W 5.6K
R417	ERDS2TJ151	1/4W 150
R418	ERDS2TJ273	1/4W 27K
R603, 604	ERDS2TJ472	1/4W 4.7K
R605	ERDS2TJ103	1/4W 10K
R606	ERDS2TJ472	1/4W 4.7K
R607, 608	ERDS2TJ102	1/4W 1K
R609	ERD2FCVG150T	1/4W 15 ⚠
R610	ERD2FCVG180T	1/4W 18 ⚠
R611, 612	ERDS2TJ101	1/4W 100
R613	ERD2FCVG330T	1/4W 33 ⚠
R614	ERDS2TJ222	1/4W 2.2K
R615	ERDS2TJ101	1/4W 100
R616	ERD2FCVG330T	1/4W 33 ⚠
R617	ERDS2TJ222	1/4W 2.2K
R618	ERDS2TJ181T	1/4W 180
R619, 620	ERDS2TJ681	1/4W 680
R621, 622	ERD2FCVG100T	1/4W 10 ⚠
R623, 624	ERDS2TJ122	1/4W 1.2K
R625-632	ERDS2TJ221	1/4W 220
R633, 634	ERD2FCVG330T	1/4W 33 ⚠
R635	ERDS2TJ120T	1/4W 12
R636	ERDS2TJ100	1/4W 10
R637	ERDS1FVJ220T	1/2W 22 ⚠
R701	ERDS2TJ821	1/4W 820
R702	ERDS2TJ102	1/4W 1K
R703	ERDS2TJ122	1/4W 1.2K
R704	ERDS2TJ152	1/4W 1.5K
R705	ERDS2TJ182	1/4W 1.8K
R706	ERDS2TJ222	1/4W 2.2K
R707	ERDS2TJ332	1/4W 3.3K
R708	ERDS2TJ472	1/4W 4.7K
R709	ERDS2TJ682T	1/4W 6.8K
R710	ERDS2TJ123	1/4W 12K
R711	ERDS2TJ223	1/4W 22K
R712	ERDS2TJ683	1/4W 68K
R713	ERDS2TJ821	1/4W 820
R714	ERDS2TJ102	1/4W 1K
R715	ERDS2TJ122	1/4W 1.2K
R716	ERDS2TJ152	1/4W 1.5K
R717	ERDS2TJ182	1/4W 1.8K
R718	ERDS2TJ222	1/4W 2.2K
R719	ERDS2TJ332	1/4W 3.3K
R720	ERDS2TJ472	1/4W 4.7K
R721	ERDS2TJ682T	1/4W 6.8K
R722	ERDS2TJ123	1/4W 12K
R723	ERDS2TJ153	1/4W 15K
R724, 725	ERDS2TJ102	1/4W 1K
R726, 727	ERDS2TJ562	1/4W 5.6K
R901	ERDS2TJ472	1/4W 4.7K
R902	ERDS2TJ822	1/4W 8.2K
R903	ERDS2TJ472	1/4W 4.7K
R904	ERDS2TJ122	1/4W 1.2K
R905, 906	ERDS2TJ103	1/4W 10K
R907, 908	ERDS2TJ472	1/4W 4.7K
R910	ERDS2TJ222	1/4W 2.2K
R911	ERDS2TJ392T	1/4W 3.9K
R912-914	ERDS2TJ103	1/4W 10K
R915	ERDS2TJ473	1/4W 47K
R918	ERDS2TJ472	1/4W 4.7K
R919	ERDS2TJ223	1/4W 22K
R920	ERDS2TJ392T	1/4W 3.9K
R921	ERDS2TJ471	1/4W 470
R922, 923	ERDS2TJ103	1/4W 10K
R924	ERDS2TJ102	1/4W 1K
R925	ERDS2TJ105T	1/4W 1M
R926	ERDS2TJ223	1/4W 22K
R927	ERDS2TJ472	1/4W 4.7K
R928-930	ERDS2TJ103	1/4W 10K
R931-933	ERDS2TJ102	1/4W 1K
R934	ERDS2TJ272T	1/4W 2.7K
R935, 936	ERDS2TJ100	1/4W 10
R937-941	ERDS2TJ472	1/4W 4.7K
R942	ERDS2TJ822	1/4W 8.2K
R943	ERDS2TJ223	1/4W 22K
R944	ERDS2TJ821	1/4W 820
R945	ERDS2TJ221	1/4W 220
R946	ERDS2TJ103	1/4W 10K
R947	ERDS2TJ392T	1/4W 3.9K
R948	ERDS2TJ184T	1/4W 180K
R949	ERDS2TJ103	1/4W 10K
R950	ERDS2TJ223	1/4W 22K
R951	ERDS2TJ821	1/4W 820
R952	ERDS2TJ223	1/4W 22K
R953	ERDS2TJ821	1/4W 820
R954	ERDS2TJ103	1/4W 10K
R955	ERDS2TJ332	1/4W 3.3K
R956	ERDS2TJ103	1/4W 10K
R957	ERDS2TJ392T	1/4W 3.9K
R958	ERDS2TJ184T	1/4W 180K
R959	ERDS2TJ103	1/4W 10K
R960	ERDS2TJ223	1/4W 22K
R962	ERDS2TJ223	1/4W 22K
R963	ERDS2TJ562	1/4W 5.6K
R965	ERDS2TJ153	1/4W 15K
R966	ERDS2TJ821	1/4W 820

www.hifiengine.com

Ref. No.	Part No.	Values & Remarks
R967	ERDS2TJ563	1/4W 56K
R968	ERDS2TJ272T	1/4W 2.7K
R969, 970	ERDS2TJ472	1/4W 4.7K
R971	ERDS2TJ152	1/4W 1.5K
R972	ERDS2TJ103	1/4W 10K
		CAPACITORS
C1-4	ECEA1HK010B	50V 1U
C5, 6	ECEA1CK220	16V 22U
C7, 8	ECEA1CK100B	16V 10U
C9	ECBT1H561KB5	50V 560P
C10	ECBT1H561KB5	50V 560P
C11, 12	ECBT1H102KB5	50V 1000P
C13, 14	ECEA0JU101B	6.3V 100U
C15, 16	ECQB1H682JZ3	50V 6800P
C17-20	ECEA1EK4R7	25V 4.7U
C21, 22	ECBT1H561KB5	50V 560P
C23	ECBT1H102KB5	50V 1000P
C24	ECEA0JU101B	6.3V 100U
C25, 26	ECQB1H472JZ	50V 4700P
C27, 28	ECQB1H223JZ3	50V 0.022U
C29, 30	ECQB1H103JZ	50V 0.01U
C31, 32	ECQB1H223JZ3	50V 0.022U
C33, 34	ECQV1H563JZ3	50V 0.056U
C37, 38	ECBT1H181KB5	50V 180P
C39, 40	ECEA1HKR47	50V 0.47U
C41, 42	ECQB1H822JZ	50V 8200P
C43, 44	ECEA1EK4R7	25V 4.7U
C45, 46	ECBT1H561KB5	50V 560P
C47, 48	ECKR2H101KB5	500V 100P
C49, 50	ECQV1H104JZ3	50V 0.1U
C51, 52	ECEA0JU101B	6.3V 100U
C53, 54	ECBT1H391KB5	50V 390P
C55, 56	ECBT1C472KR5	16V 4700P
C57, 58	ECQB1H153JZ	50V 0.015U
C301	ECQP1153JZ	100V 0.015U
C302	ECEA1EK4R7	25V 4.7U
C303	ECKR1H392KB5	50V 3900P
C304, 305	ECKW1H222KB5	50V 2200P
C306	ECKD1H682KB	50V 6800P
C307	ECKR1H103ZF5	50V 0.01U
C310	ECKR1H472KB5	50V 4700P
C311	ECKR1H103ZF5	50V 0.01U
C328, 329	ECCR1H221K5	50V 220P
C331	ECKR1H103ZF5	50V 0.01U
C401, 402	ECKT1H122KB	50V 1200P
C403, 404	ECKD1H152KB	50V 1500P
C405-408	ECQB1H222JZ3	50V 2200P
C409, 410	ECEA1HUR56B	50V 0.56U
C411, 412	ECEA1HKR33	50V 0.33U
C413, 414	ECEA1EK4R7	25V 4.7U

Ref. No.	Part No.	Values & Remarks
C415, 416	ECEA1CK100B	16V 10U
C601	ECKR2H682PE	500V 6800P
C603, 604	ECEA1EU102B	25V 1000U
C605	ECEA1EU222	25V 2200U
C606	ECKR2H682PE	500V 6800P
C607, 608	ECEA1AU471	10V 470U
C609, 610	ECKR1H103ZF5	50V 0.01U
C612	ECEA1HU470	50V 47U
C613, 614	ECKR1H103ZF5	50V 0.01U
C615, 616	ECEA1VU220	35V 22U
C617, 618	ECKR1H103ZF5	50V 0.01U
C619, 620	ECEA1AU102B	10V 1000U
C621, 622	ECEA1CK470	16V 47U
C623, 624	ECBT1E103ZF	25V 0.01U
C625, 626	ECKR1H103ZF5	50V 0.01U
C701	ECKR1H103ZF5	50V 0.01U
C702	ECBT1E103ZF	25V 0.01U
C901	ECEA0JU222B	6.3V 2200U
C902, 903	ECKR1H103ZF5	50V 0.01U
C904	ECEA1EK4R7	25V 4.7U
C905	ECEA1HK010B	50V 1U
C906	ECEA1CK100B	16V 10U

www.hifiengine.com

Ref.No.	Part No.	Part Name & Description	Remarks
		MECHANISM PARTS LIST	
DECK 1			
101	RMD5013ZD	HEAD ANGLE	
102	RUA793YC	HEAD BASE	
103	SJH103-1	PLAYBACK HEAD	
103-1	REX0060	LEAD WIRE BLOCK	
104	1UB0089ZA	ARM	
104-1	RUW148ZA	SPRING	
105	1DM0005ZA	REEL TABLE (R)	
106	1DM0017ZA	REEL TABLE (F)	
107	RUB502ZC	LEVER	
108	RDG5772ZC	GEAR	
109	RUB508ZB	BRAKE ROD	
110	RUB506ZB	ROCK LEVER	
111	RUG82Z	DAMYE HEAD	
112	1UB0087ZA	ARM	
112-1	RUW140ZC	SPRING	
114	RNL1Z	DAMPER ARM	
115	RUB503ZD	MAIN LEVER	
116	RZUAR300	CHASSIS	
117	RUW142ZA	SPRING	
118	QBA51278	SPRING	
120	RUW139ZA	SPRING	
121	RFM134ZA	DC MOTOR	
122	1UE0015ZA	PLUNGER	
123	RUB428Z	MOVING IRON CORE	
124	RUL1030YB	ANGLE	
125	RMD5017ZA	ANGLE	
126	RDG5927ZG	MAIN GERA	
127	1DW0053ZB	FLYWHEEL (F)	
127-1	RNW139ZA	WASHER	
128	RHM278ZA	SPACER	
129	1DG0006ZA	REEL TABLE GEAR	
130	RUB513ZD	ARM	
131	1UB0091ZA	LEVER	
131-1	RUW146ZA	SPRING	
132	1DR0011ZA	MAIN PULLEY	
133	RDV90ZB	BELT	
134	RDG5769ZA	REEL TABLE GEAR	
135	RUQ10Z	SPRING	
136	RUW145ZA	SPRING	
137	1UB0090ZA	ROD	
137-1	RUB512ZB	ROD	
138	RDG5773ZB	GEAR	
139	RUQ30Z	SPRING	
140	RUS609Z	TAPE PRESSURE SPRING	
141	RUB514ZC	LEVER	
142	RUW147ZA	SPRING	
144	RUB509ZA	LEVER	
145	RDV109ZA	CAPSTAN BELT	

Ref.No.	Part No.	Part Name & Description	Remarks
146	RUB507Z	EJECT ROD (L)	
148	RUW144ZA	SPRING	
149	RHG3032ZA	RUBBER CUSHION	
150	RNL180ZB	DAMPER ARM	
151	QHQ1361A	SCREW	
152	RHE5201ZA	SCREW	
153	XTN26+7J	SCREW	
154	XTN26+16F	SCREW	
155	XTW2+8S	SCREW	
156	XYC2+JF16	SCREW	
157	XSN26+3	SCREW	
158	XTN2+5F	SCREW	

www.hifiengine.com

■ MECHANISM PARTS LOCATION •DECK 1

(DECK 1: Top View)

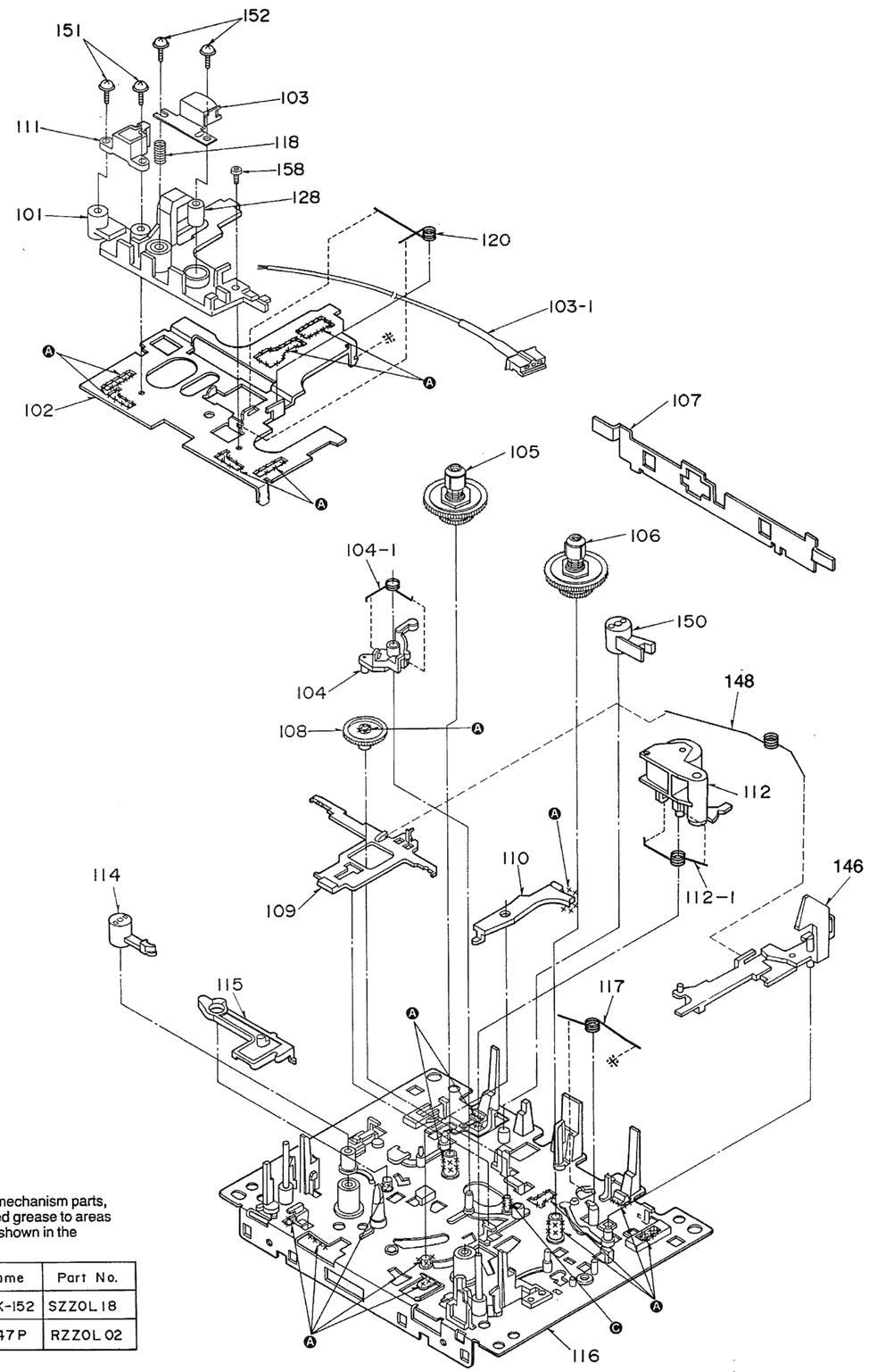

(DECK 1: Bottom View)

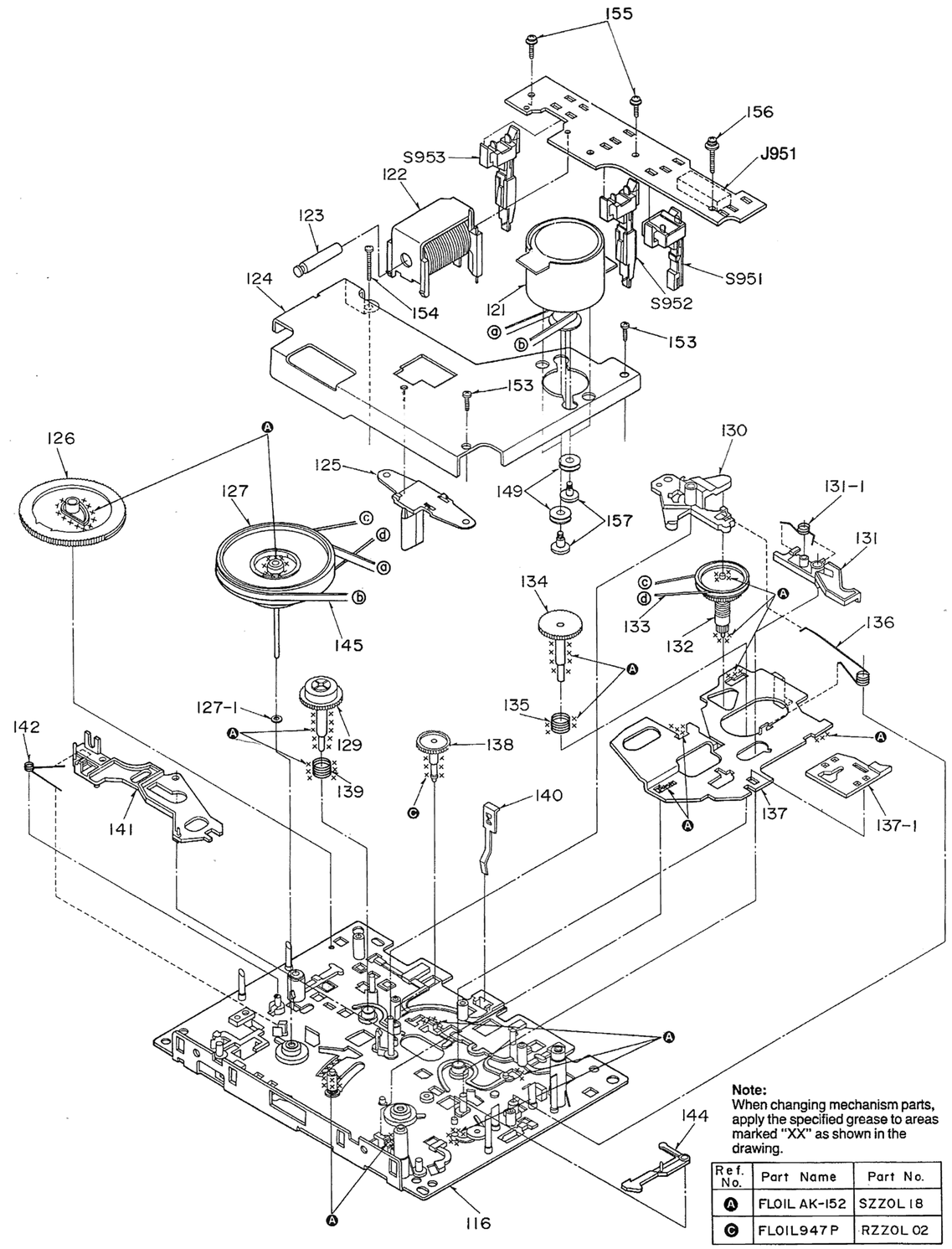

Note:
When changing mechanism parts, apply the specified grease to areas marked "XX" as shown in the drawing.

Ref. No.	Part Name	Part No.
Ⓐ	FL0IL AK-152	SZZ0L 18
Ⓒ	FL0IL947P	RZZ0L 02

Note:
When changing mechanism parts, apply the specified grease to areas marked "XX" as shown in the drawing.

Ref. No.	Part Name	Part No.
Ⓐ	FL0IL AK-152	SZZ0L 18
Ⓒ	FL0IL947P	RZZ0L 02

www.hifiengine.com

■ MECHANISM PARTS LOCATION •DECK 2

1 2 3 4 5 6 7 8 9

A B C D E F

(DECK 2: Top View)

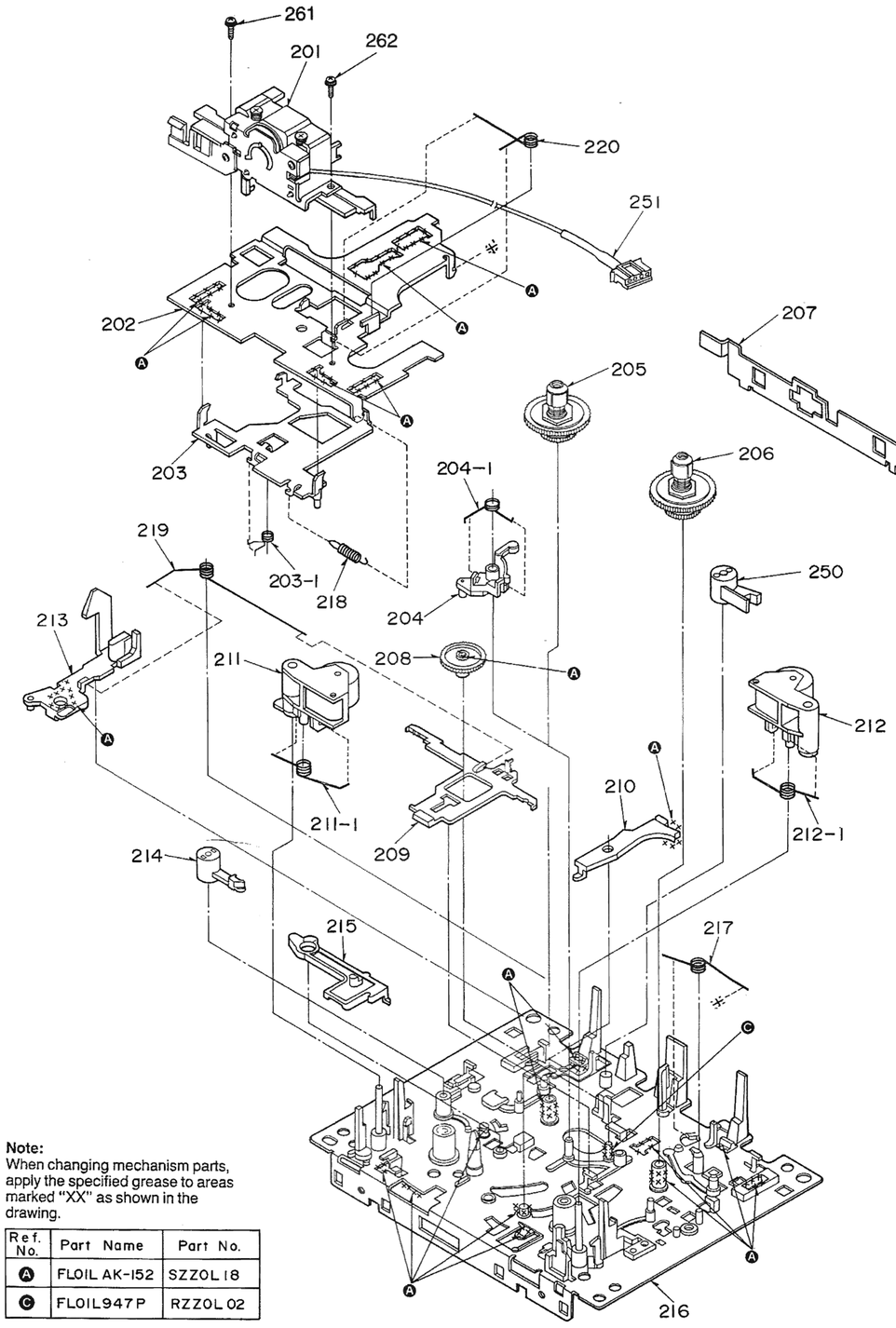

Note:
When changing mechanism parts, apply the specified grease to areas marked "XX" as shown in the drawing.

Ref. No.	Part Name	Part No.
A	FL0IL AK-152	SZZ0L 18
C	FL0IL947P	RZZ0L 02

(DECK 2: Bottom View)

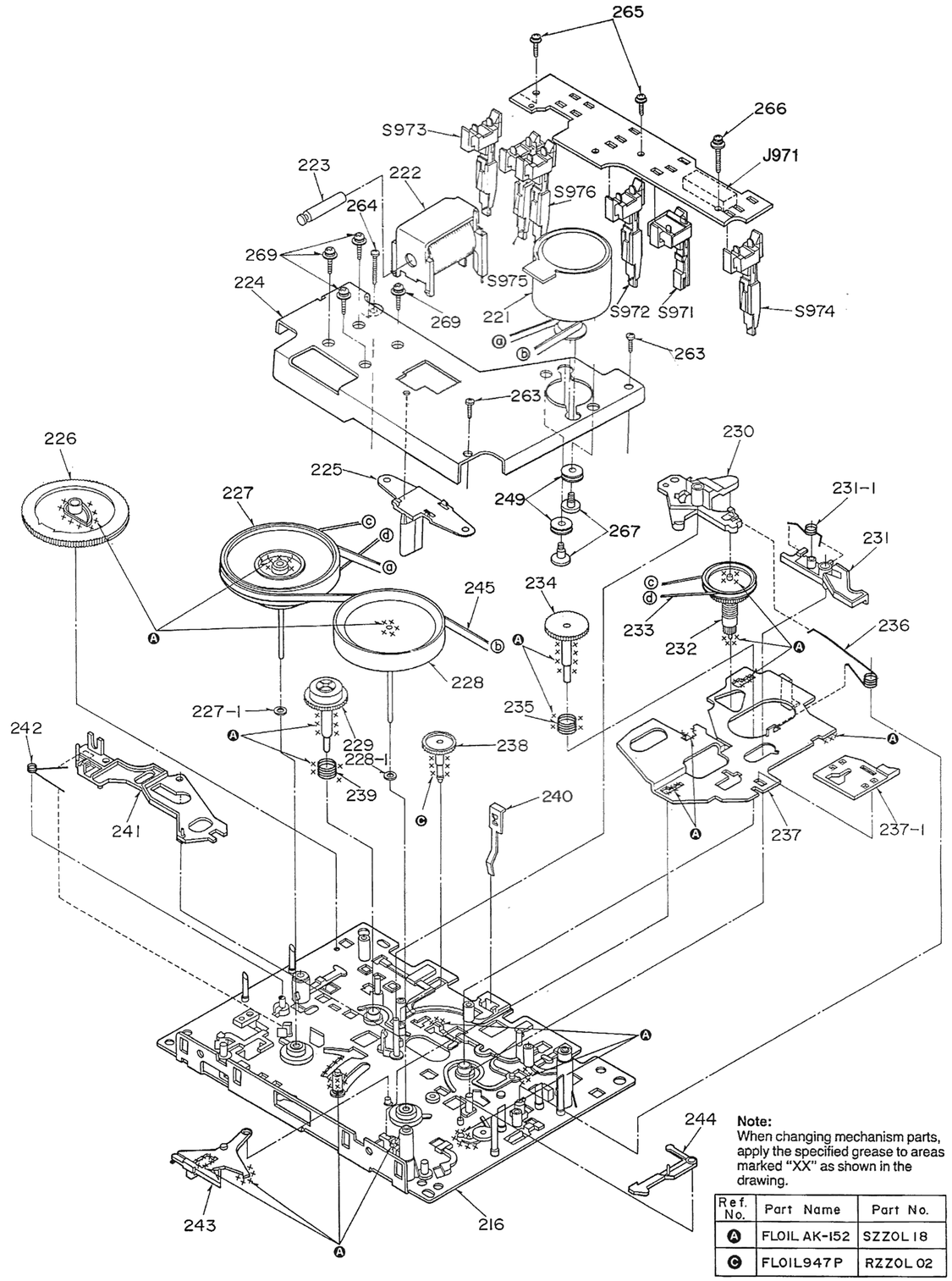

Note:
When changing mechanism parts, apply the specified grease to areas marked "XX" as shown in the drawing.

Ref. No.	Part Name	Part No.
A	FL0IL AK-152	SZZ0L 18
C	FL0IL947P	RZZ0L 02

www.hifiengine.com

Ref. No.	Part No.	Part Name & Description	Remarks
		MECHANISM PARTS LIST	
DECK 2			
201	RXQ0019	HEAD BLOCK (REC./PLAYBACK)	
202	RUA793Z	HEAD BASE	
203	RZLAR300	ROD	
203-1	RUW143Z	SPRING	
204	1UB0089ZA	ARM	
204-1	RUW148ZA	SPRING	
205	1DM0018ZA	REEL TABLE (R)	
206	1DM0017ZA	REEL TABLE (F)	
207	RUB502Z	LEVER	
208	RDG5772Z	GEAR	
209	RUB508ZB	BRAKE ROD	
210	RUB506Z	LEVER	
211	1UB0088ZA	ARM (R)	
211-1	RUW141Z	SPRING	
212	1UB0087ZA	ARM (F)	
212-1	RUW140Z	SPRING	
213	RUB541Z	EJECT ROD (R)	
214	RNL1Z	DAMPER ARM	
215	RUB503Z	MAIN LEVER	
216	RZUSX980	CHASSIS	
217	RUW142ZA	SPRING	
218	RUD105Z	SPRING	
219	RUW167ZA	SPRING	
220	RUW139ZA	SPRING	
221	RFM133ZA	DC MOTOR	
222	1UE0015ZA	PLUNGER	
223	RUB428Z	MOVING IRON CORE	
224	RUL1030XC	ANGLE	
225	RMD5014Z	ANGLE	
226	RDG5927ZG	GEAR	
227	1DW0053ZB	FLYWHEEL (F)	
227-1	RNW139ZA	WASHER	
228	1DW0054ZC	FLYWHEEL (R)	
228-1	RNW138Z	WASHER	
229	1DG0006ZA	REEL TABLE GEAR	
230	RUB513Z	ARM	
231	1UB0091ZA	LEVER	
231-1	RUW146ZA	SPRING	
232	1DR0011ZA	MAIN PULLEY	
233	RDV90ZB	BELT	
234	RDG5769ZA	REEL TABLE GEAR	
235	RUQ10Z	SPRING	
236	RUW145ZA	SPRING	
237	1UB0090ZA	ROD	
237-1	RUB512Z	ROD	
238	RDG5773ZB	GEAR	
239	RUQ30Z	SPRING	
240	RUS609Z	TAPE PRESSURE SPRING	

Ref. No.	Part No.	Part Name & Description	Remarks
241	RUB514Z	LEVER	
242	RUW147ZA	SPRING	
243	RUB515Z	LEVER	
244	RUB509ZA	LEVER	
245	RDV108ZA	CAPSTAN BELT	
249	RHG3032Z	RUBBER CUSHION	
250	RNL180ZB	DAMPER ARM	
251	REX0059	LEAD WIRE BLOCK	
261	XTW2+6L	SCREW	
262	XTW2+8L	SCREW	
263	XTN26+7J	SCREW	
264	XTN26+16F	SCREW	
265	XTW2+8S	SCREW	
266	XYC2+JF16	SCREW	
267	QHQ1303	SCREW	
269	XYN26+F6	SCREW	

www.hifiengine.com

Ref. No.	Part No.	Part Name & Description	Remarks
		CABINET PARTS	
1	RKM0016-K1	COVER	
2	RYF0119A-K	CASSETTE LID (DECK1)	
3	RYF0119B-K	CASSETTE LID (DECK2)	
4	SNE2129-1	SCREW	
5	XTBS3+8JFZ1	SCREW	
6	RDG0145	GEAR	
7	RGU0030	BUTTON	
8	RGU0070	BUTTON	
9	RGU0519A-K	BUTTON	
10	RGU0518A-K	BUTTON	
11	RGU0522A-K	BUTTON	
12	RGV0072-K	KNOB	
13	RGW0109-K	KNOB	
14	RGW0110-K	KNOB	
15	RKF0169A-K	CASSETTE HOLDER	
15-1	QBP2006A	SPRING	
16	RMA0406	ANGLE	
17	RMA0407	ANGLE	
18	RME0068-1	SPRING	
19	RML0185-1	LEVER(L)	
20	RML0186-1	LEVER(R)	
21	RMM0014	ROD	
22	RMR0357	HOLDER(L)	
23	RMR0358	HOLDER(R)	
24	XTBS26+8J	SCREW	
25	XTB3+10JFZ	SCREW	
26	XTWS3+10Q	SCREW	
27	RFKGSTR212PK	FRONT PANEL ASS'Y	<P, PC>
27	RFKGSTR212EK	FRONT PANEL ASS'Y	<E, EB, EG, GC, GN>
28	RGR0112A-A2	REAR PANEL	<P, PC>
28	RGR0112B-A1	REAR PANEL	<E>
28	RGR0112B-B1	REAR PANEL	<EG>
28	RGR0112B-C1	REAR PANEL	<EB, GN>
28	RGR0112C-A2	REAR PANEL	<GC>
30	RKQ0089	HOLDER	
31	RFKJSTR313PK	BOTTOM BOARD ASS'Y	
31-1	RKA0009-1	FOOT	
32	SJS9331A	AC OUTLET COVER	<P, PC>
33	XTBS3+8JFZ1	SCREW	
34	XTB3+10JFZ	SCREW	
35	XTB3+20JFZ	SCREW	
36	RMN0112	FL HOLDER	
		PACKING MATERIAL	
P1	RPG0798	CARTON BOX	<P>
P1	RPG0799	CARTON BOX	<PC>
P1	RPG0800	CARTON BOX	<E, EB, EG, GC, GN>
P2	RPN0296	PAD	

Ref. No.	Part No.	Part Name & Description	Remarks
P3	SPSD152	CARTON BOX, ACCESSORIES	
		ACCESSORIES	
A1	RQF0939	INST. MANUAL ASS'Y	<P>
A1	RQF0940	INST. MANUAL ASS'Y	<PC>
A1	RQF0941	INST. MANUAL ASS'Y	<E>
A1	RQF0942	INST. MANUAL ASS'Y	<EB>
A1	RQF0943	INST. MANUAL ASS'Y	<EG>
A1	RQF0944	INST. MANUAL ASS'Y	<GC>
A1	RQF0945	INST. MANUAL ASS'Y	<GN>
A1-1	RQT0838-P	INSTRUCTION MANUAL	<P>
A1-1	RFKSSTR212PC	INSTRUCTION MANUAL	<PC>
A1-1	RFKSSTR212EK	INSTRUCTION MANUAL	<E>
A1-1	RQT0843-D	INSTRUCTION MANUAL	<EG>
A1-1	RQT0842-B	INSTRUCTION MANUAL	<EB, GN>
A1-1	RQT0840-G	INSTRUCTION MANUAL	<GC>
A1-2	SQX7179	WARRANTY CARD	<P>
A1-2	SQX7183	WARRANTY CARD	<PC>
A1-2	RQA0013	WARRANTY CARD	<E, EB, EG>
A1-2	SQX7186	WARRANTY CARD	<GN>
A1-3	SQX9129-1	SERVICE CENTER LIST	<P>
A1-3	SQX9131	SERVICE CENTER LIST	<PC>
A1-3	RQCB0169	SERVICE CENTER LIST	<E, EB, EG, GC, GN>
A1-4	XZB24X33C04	COVER	<P>
A1-4	SPB1061	COVER	<PC, E, EB, EG, GC, GN>
A2	SFDAC05E03	AC POWER SUPPLY CORD	<E, EG> ⚠
A2	SJA173-1	AC POWER SUPPLY CORD	<GN> ⚠
A2	SJA175	AC POWER SUPPLY CORD	<PC> ⚠
A2	SJA175-1	AC POWER SUPPLY CORD	<P> ⚠
A2	SJA193-1	AC POWER SUPPLY CORD	<EB> ⚠
A2	RJA0004	AC POWER SUPPLY CORD	<GC> ⚠
A3	SJP2249-3	STEREO CONNECTION CABLE	
A4	SJP2257T	STEREO MINI CABLE	
A5	SJP9215	AC PLUG ADAPTOR	<GC> ⚠

www.hifiengine.com

■ CABINET PARTS LOCATION

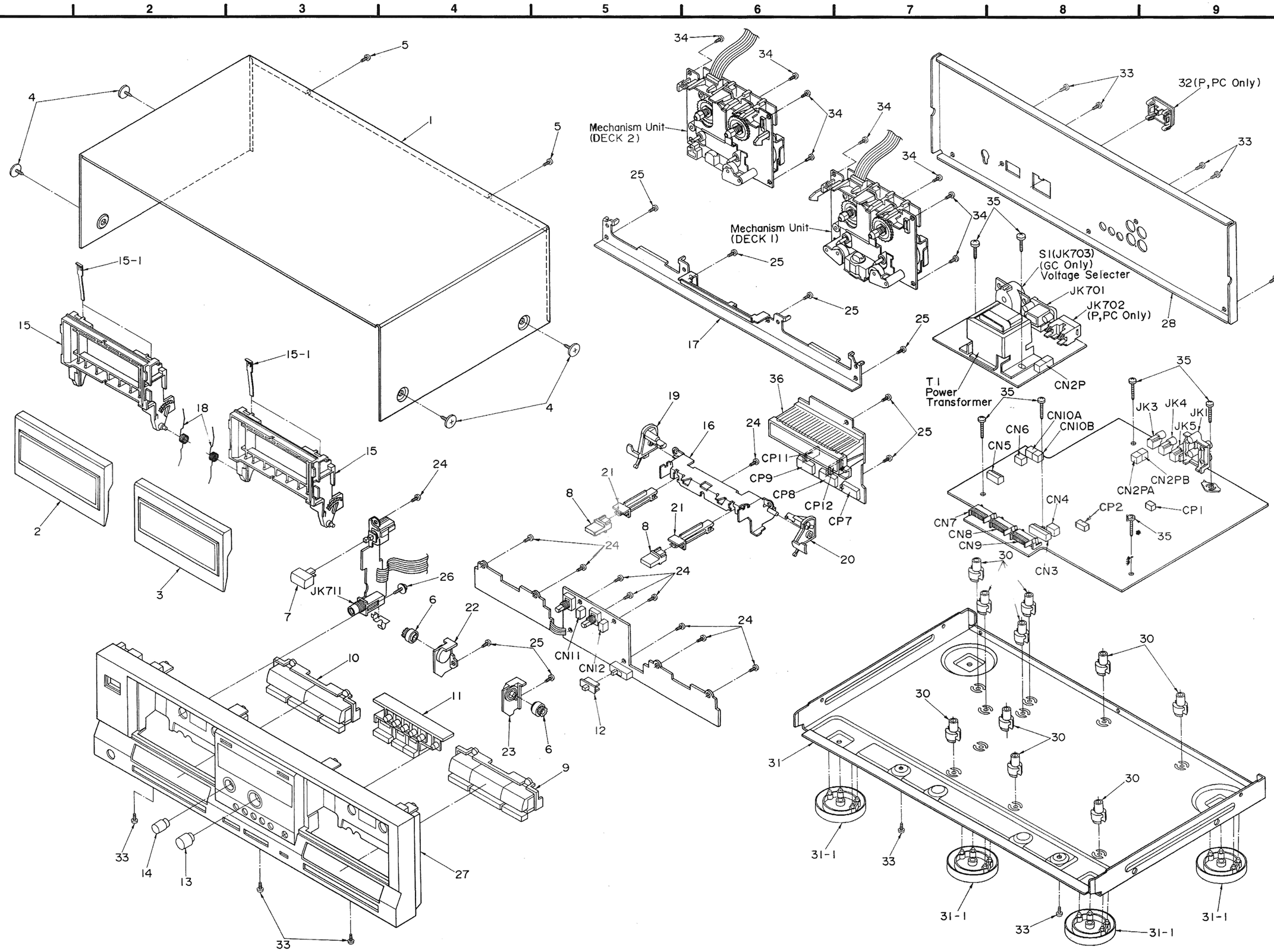

Printed in Japan
F910112100FF/HH/TN

www.hifiengine.com